Mitsutomo

Mitsutomo Wiring Diagram

Outdoor Unit: UHO60-NB-Q

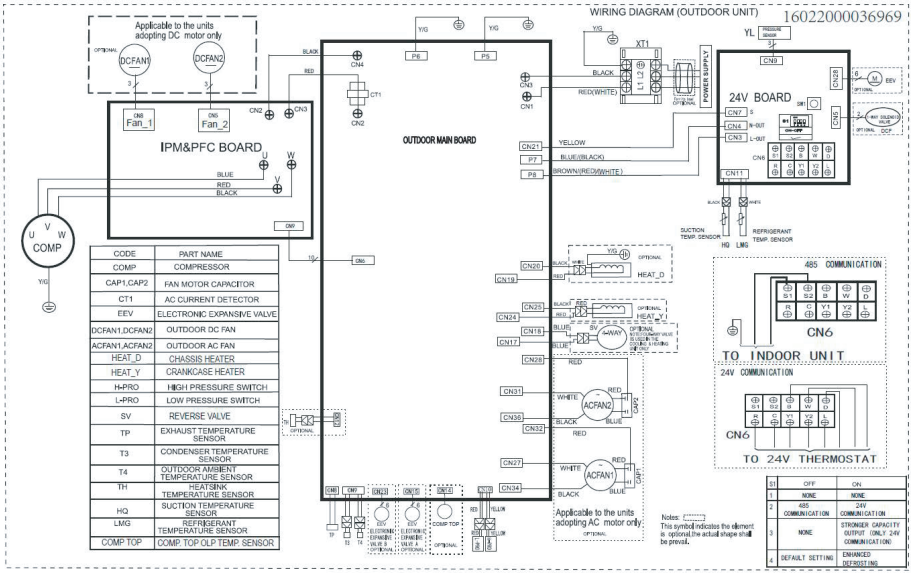

CODE	PART NAME
COMP	COMPRESSOR
CAP1,CAP2	FAN MOTOR CAPACITOR
CT1	AC CURRENT DETECTOR
EEV	ELECTRONIC EXPANSIVE VALVE
DCFAN1,DCFAN2	OUTDOOR DC FAN
ACFAN1,ACFAN2	OUTDOOR AC FAN
HEAT_D	CHASSIS HEATER
HEAT_Y	CRANKCASE HEATER
H-PRO	HIGH PRESSURE SWITCH
L-PRO	LOW PRESSURE SWITCH
SV	REVERSE VALVE
TP	EXHAUST TEMPERATURE SENSOR
T3	CONDENSER TEMPERATURE SENSOR
T4	OUTDOOR AMBIENT TEMPERATURE SENSOR
TH	HEATSINK TEMPERATURE SENSOR
HQ	SUCTION TEMPERATURE SENSOR
LMG	REFRIGERANT TEMPERATURE SENSOR
COMP TOP	COMP. TOP OLP TEMP. SENSOR

S1	OFF	ON
1	NONE	NONE
2	485 COMMUNICATION	24V COMMUNICATION
3	NONE	STRONGER CAPACITY OUTPUT (ONLY 24V COMMUNICATION)
4	DEFAULT SETTING	ENHANCED DEFROSTING
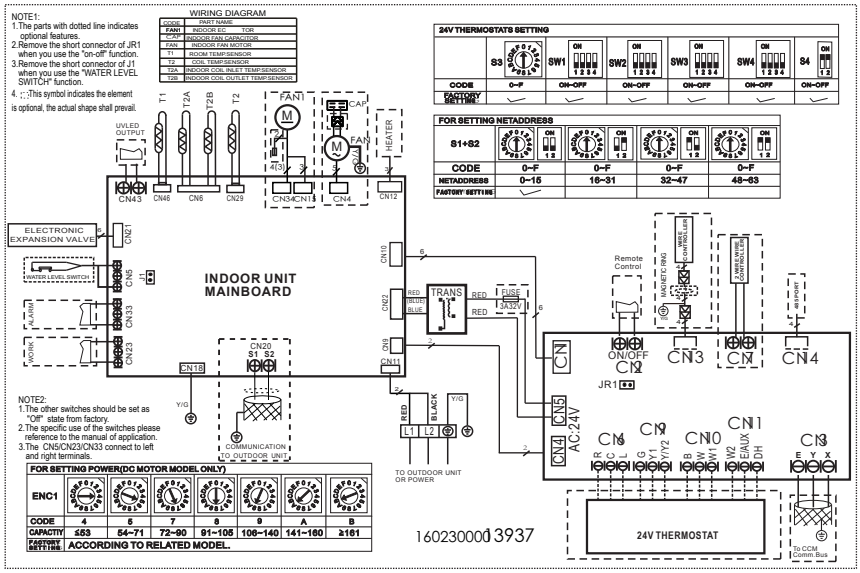
Indoor Unit: UHM60-DB-Q