Mitsutomo Wiring Diagram

Outdoor Unit: HO-SG36-LA-Q

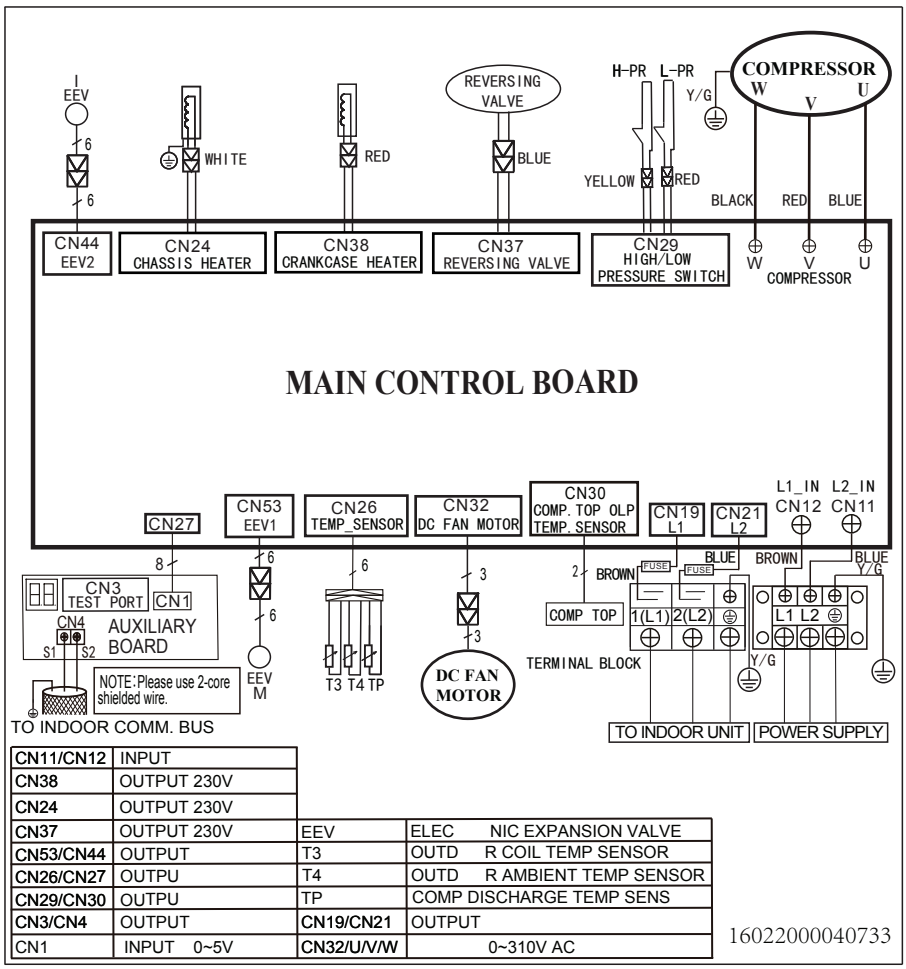

CN11/CN12	INPUT		
CN38	OUTPUT 230V		
CN24	OUTPUT 230V		
CN37	OUTPUT 230V	EEV	ELEC NIC EXPANSION VALVE
CN53/CN44	OUTPUT	T3	OUTD R COIL TEMP SENSOR
CN26/CN27	OUTPU	T4	OUTD R AMBIENT TEMP SENSOR
CN29/CN30	OUTPU	TP	COMP DISCHARGE TEMP SENS
CN3/CN4	OUTPUT	CN19/CN21	OUTPUT
CN1	INPUT 0~5V	CN32/U/V/W	0~310V AC

16022000040733
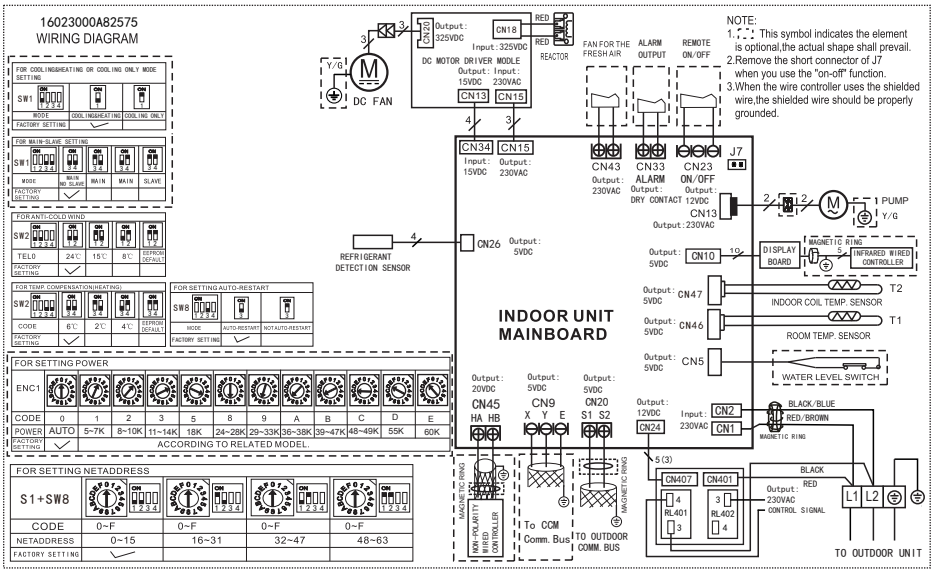
Indoor Unit: HD-UG36-LA-Q