Mitsutomo Wiring Diagram
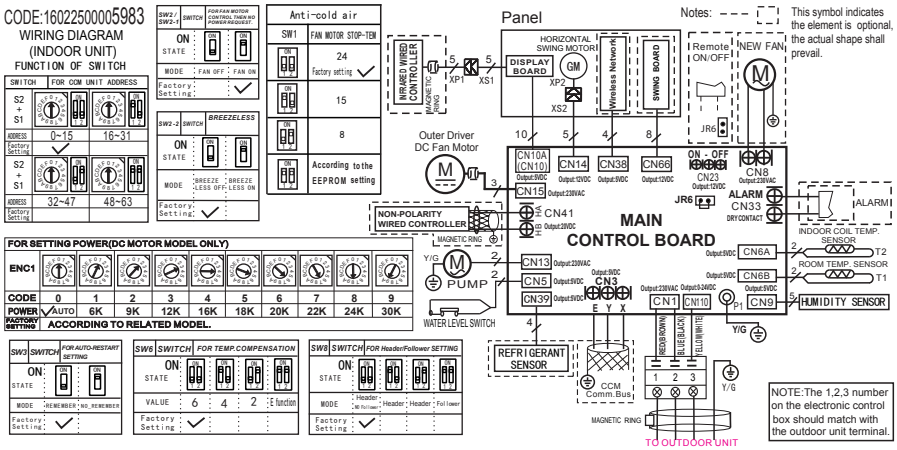
Outdoor Unit: HC-UZ12-LA-Q