Mitsutomo Wiring Diagram
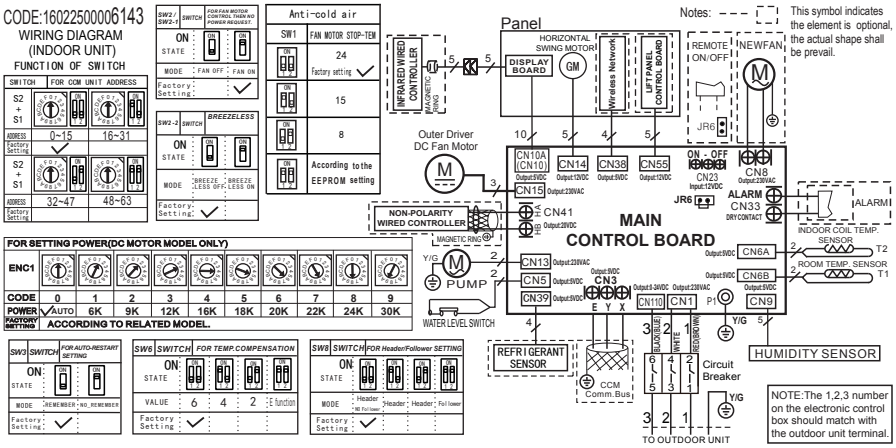
Outdoor Unit: HJ-UZ12-LA-Q