Mitsutomo Wiring Diagram
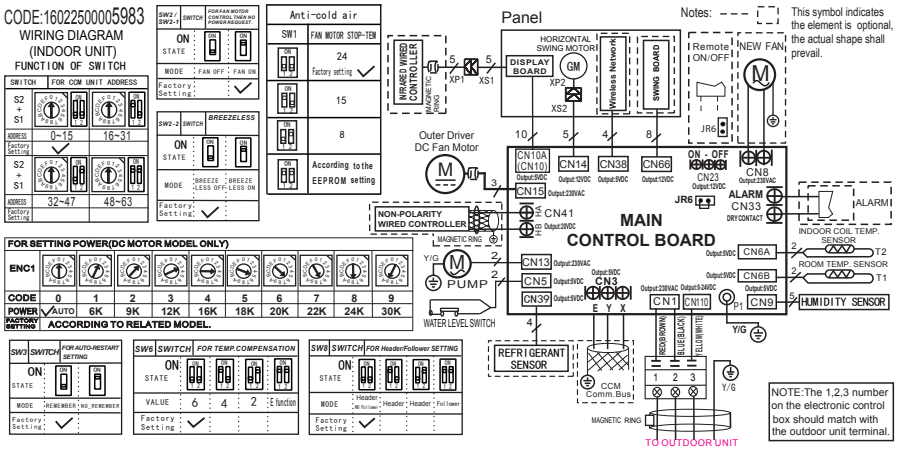
Outdoor Unit: HC-UZ18-LA-Q