Mitsutomo Wiring Diagram

Outdoor Unit: UHO18-NB-LA-Q

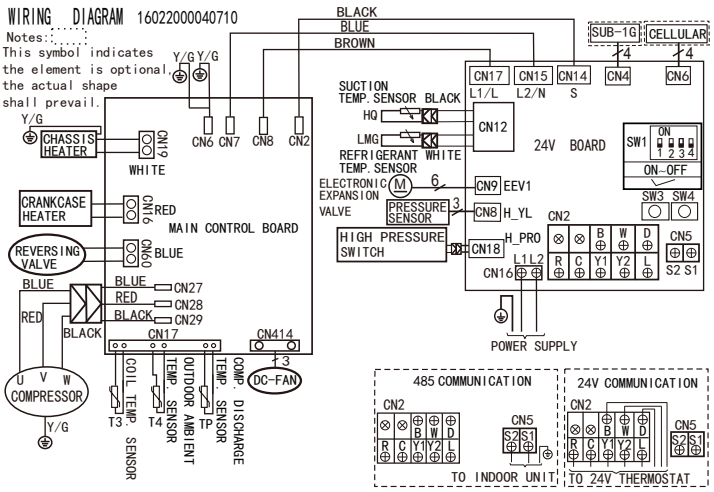

MAIN CONTROL BOARD		24V BOARD	
CN2/CN7/CN8	INPUT 230V AC	CN16	INPUT 230V AC
CN16	OUTPUT 230V AC	CN18/CN12/CN5	OUTPUT 0~5V DC
CN60	OUTPUT 230V AC	CN4/CN6/CN8	OUTPUT 0~5V DC
CN19	OUTPUT 230V AC	CN9	OUTPUT 0~12V DC
CN17	OUTPUT 0~5V DC	CN14/CN15/CN17	OUTPUT 230VAC
CN414	OUTPUT 0~310V AC		
CN27/CN28/CN29	OUTPUT 0~310V AC	CN2	INPUT 0~24VAC

SW1	OFF	ON
1	NONE	NONE
2	24V COMMUNICATION /485 COMMUNICATION	24V COMMUNICATION ONLY
3	NONE	STRONGER CAPACITY OUTPUT (ONLY 24V COMMUNICATION)
4	DEFAULT SETTING	ENHANCED DEFROSTING

Indoor Unit: UHM18-BB-LA-Q

CODE	PART NAME
FAN1	INDOOR ECM MOTOR
T1	ROOM TEMP. SENSOR
T2	COIL TEMP. SENSOR
T2A	INDOOR COIL INLET TEMP. SENSOR
T2B	INDOOR COIL OUTLET TEMP. SENSOR

1.This symbol indicates the element is optional,the actual shape shall prevail.
2.Remove the short connector of JR1 when using the "ON-OFF" function.
3.Remove the short connector of J1 when using the "WATER LEVEL SWITCH" function.

FOR SETTING POWER(DC MOTOR MODEL ONLY)

ENC1							
CODE	0	3	5	8	9	A	C	E
CAPACITY	AUTO	12K	18K	24K	30K	36K	48K	60K
FACTORY SETTING	✓	ACCORDING TO RELATED MODEL						

16023000017296

FOR SETTING NET ADDRESS

S1+SW8				
CODE	0~F	0~F	0~F	0~F
NET ADDRESS	0~15	16~31	32~47	48~63
FACTORY SETTING	✓			

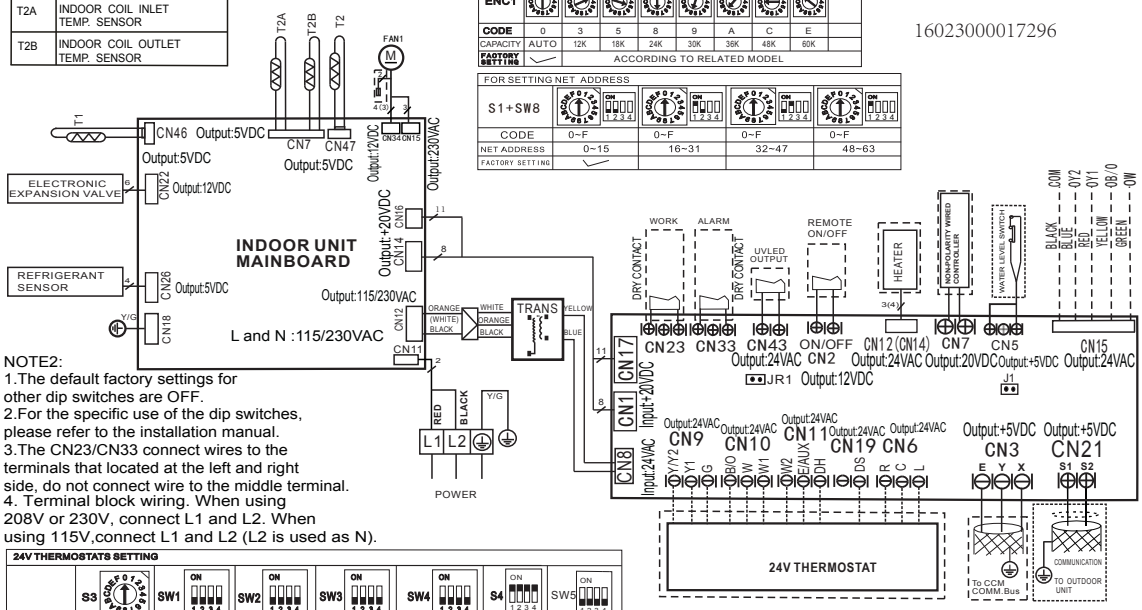

NOTE2:
1.The default factory settings for other dip switches are OFF.
2.For the specific use of the dip switches, please refer to the installation manual.
3.The CN23/CN33 connect wires to the terminals that located at the left and right side, do not connect wire to the middle terminal.
4. Terminal block wiring. When using 208V or 230V, connect L1 and L2. When using 115V,connect L1 and L2 (L2 is used as N).

24V THERMOSTATS SETTING

	S3	SW1	SW2	SW3	SW4	S4	SW5
CODE	0~F	ON~OFF	ON~OFF	ON~OFF	ON~OFF	ON~OFF	ON~OFF
FACTORY SETTING	✓	✓	✓	✓	✓	✓	✓

(Mitsutomo's products are subject to continuous improvements. Mitsutomo reserves the right to modify product design specifications and information in this data sheet without notice and without incurring any obligations)