Mitsutomo Wiring Diagram
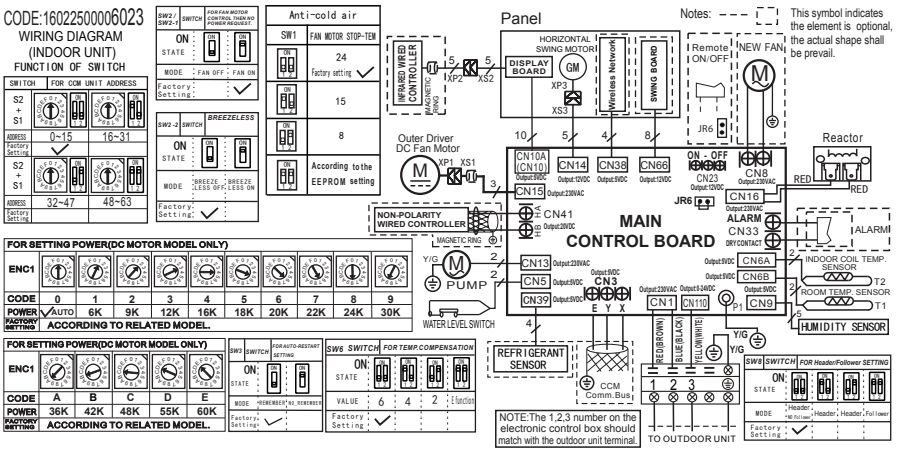
Outdoor Unit: HC-UZ24-LA-Q