Mitsutomo Wiring Diagram

Outdoor Unit: HO-MS48-LA-Q

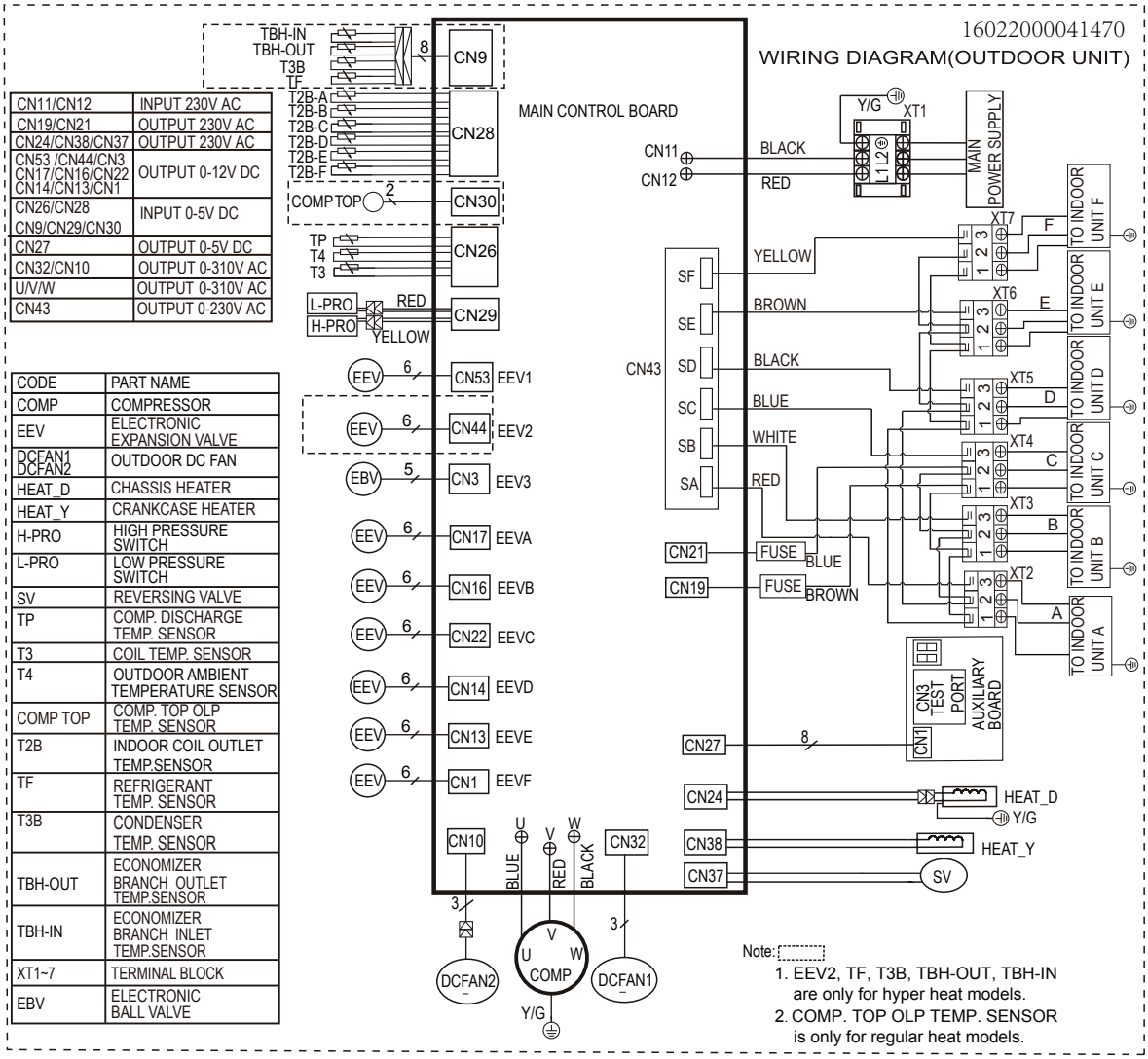

CN11/CN12	INPUT 230V AC
CN19/CN21	OUTPUT 230V AC
CN24/CN38/CN37	OUTPUT 230V AC
CN53 /CN44/CN3 CN17/CN16/CN22 CN14/CN13/CN1	OUTPUT 0-12V DC
CN26/CN28 CN9/CN29/CN30	INPUT 0-5V DC
CN27	OUTPUT 0-5V DC
CN32/CN10	OUTPUT 0-310V AC
U/V/W	OUTPUT 0-310V AC
CN43	OUTPUT 0-230V AC

CODE	PART NAME
COMP	COMPRESSOR
EEV	ELECTRONIC EXPANSION VALVE
DCFAN1 DCFAN2	OUTDOOR DC FAN
HEAT_D	CHASSIS HEATER
HEAT_Y	CRANKCASE HEATER
H-PRO	HIGH PRESSURE SWITCH
L-PRO	LOW PRESSURE SWITCH
SV	REVERSING VALVE
TP	COMP. DISCHARGE TEMP. SENSOR
T3	COIL TEMP. SENSOR
T4	OUTDOOR AMBIENT TEMPERATURE SENSOR
COMP TOP	COMP. TOP OLP TEMP. SENSOR
T2B	INDOOR COIL OUTLET TEMP.SENSOR
TF	REFRIGERANT TEMP. SENSOR
T3B	CONDENSER TEMP. SENSOR
TBH-OUT	ECONOMIZER BRANCH OUTLET TEMP.SENSOR
TBH-IN	ECONOMIZER BRANCH INLET TEMP.SENSOR
XT1~7	TERMINAL BLOCK
EBV	ELECTRONIC BALL VALVE

(Mitsutomo's products are subject to continuous improvements. Mitsutomo reserves the right to modify product design specifications and information in this data sheet without notice and without incurring any obligations)