Mitsutomo Wiring Diagram

Outdoor Unit: RO-SZ09-LA-J

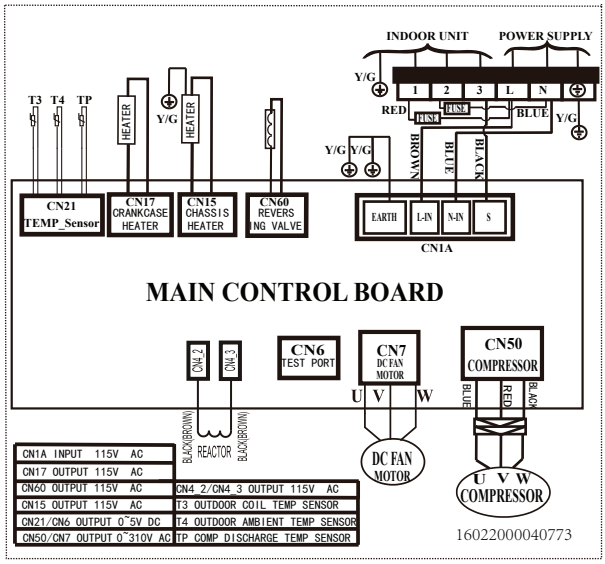

Indoor Unit: RW-SZ09-LA-J

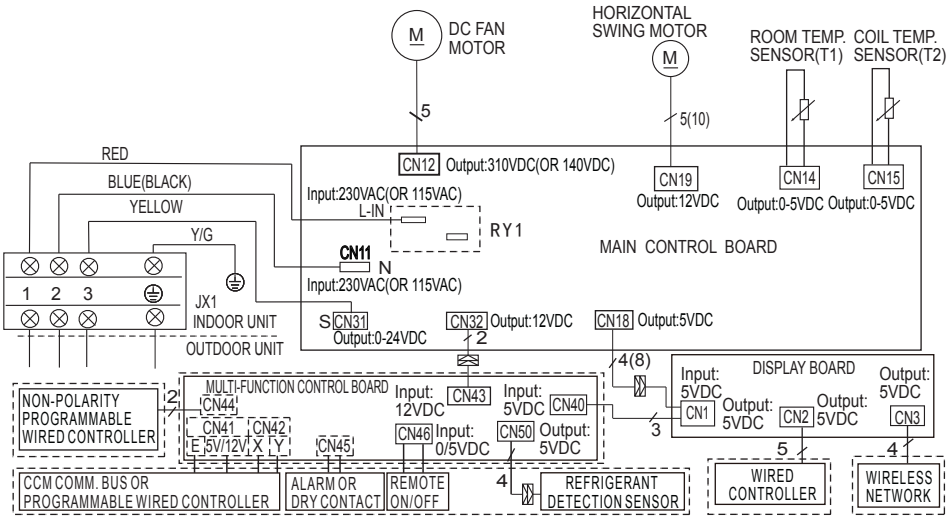

Note1:COMPONENT IN DASH LINE IS OPTIONAL OR FIELD WIRING.

Note2:The programmable wired controller and CCM COMM.BUS use the same port CN42 CN41

FOR SETTING NET ADDRESS (CCM Comm.Bus)				
ENC3+F1 (MULTI-FUNCTION CONTROL BOARD)				
CODE	0~F	0~F	0~F	0~F
NETADDRESS	0~15	16~31	32~47	48~63
FACTORY SETTING	✓			

(Mitsutomo's products are subject to continuous improvements. Mitsutomo reserves the right to modify product design specifications and information in this data sheet without notice and without incurring any obligations)