Mitsutomo Wiring Diagram

Indoor Unit: RO-MQ28-LA-Q

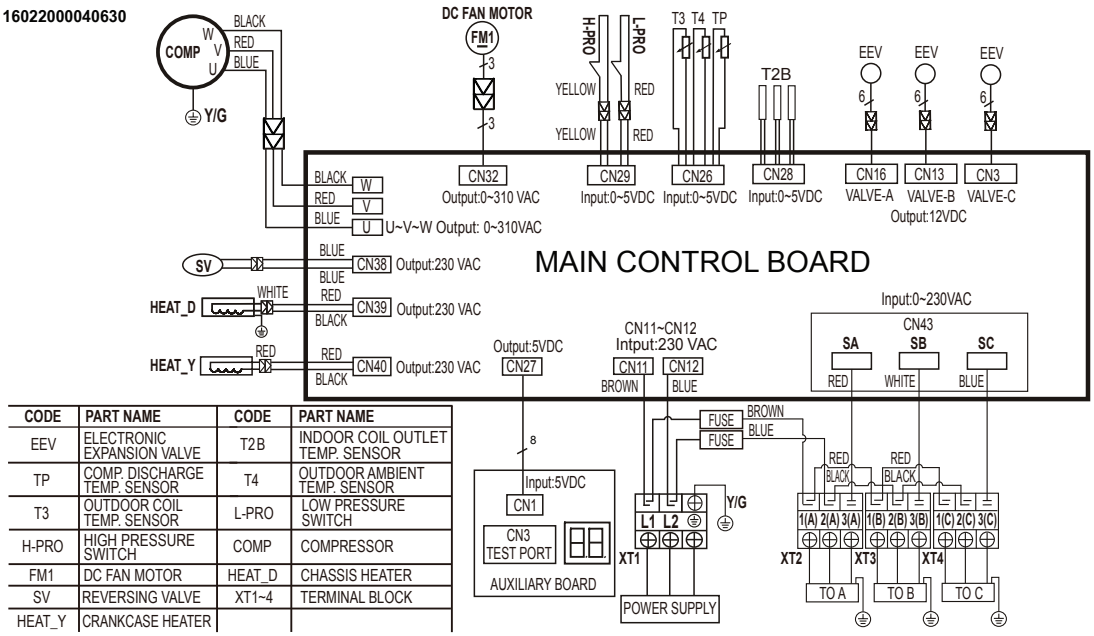

CODE	PART NAME	CODE	PART NAME
EEV	ELECTRONIC EXPANSION VALVE	T2B	INDOOR COIL OUTLET TEMP. SENSOR
TP	COMP. DISCHARGE TEMP. SENSOR	T4	OUTDOOR AMBIENT TEMP. SENSOR
T3	OUTDOOR COIL TEMP. SENSOR	L-PRO	LOW PRESSURE SWITCH
H-PRO	HIGH PRESSURE SWITCH	COMP	COMPRESSOR
FM1	DC FAN MOTOR	HEAT_D	CHASSIS HEATER
SV	REVERSING VALVE	XT1~4	TERMINAL BLOCK
HEAT_Y	CRANKCASE HEATER		

(Mitsutomo's products are subject to continuous improvements. Mitsutomo reserves the right to modify product design specifications and information in this data sheet without notice and without incurring any obligations)