Mitsutomo Wiring Diagram

Outdoor Unit: HO-SZ33-LA-Q

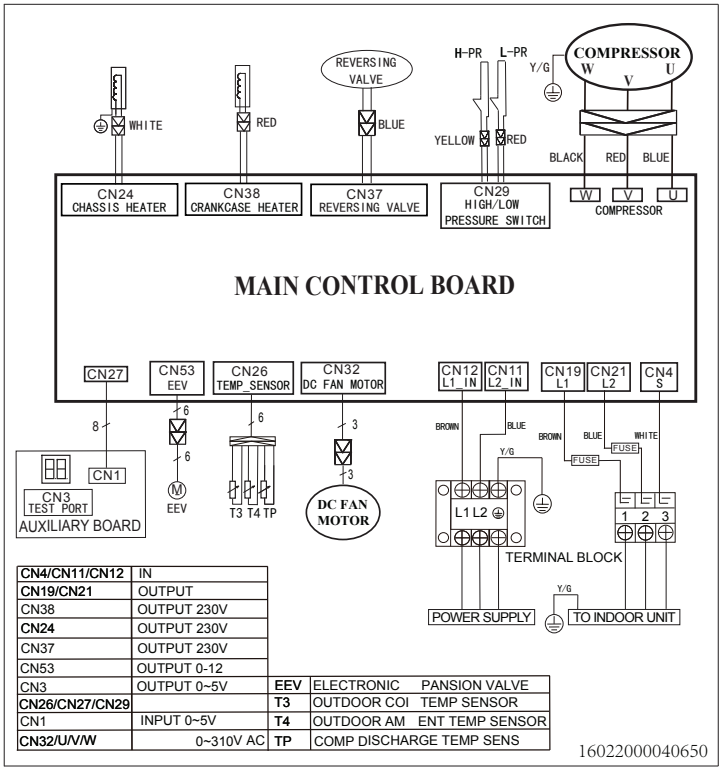

CN4/CN11/CN12	IN		
CN19/CN21	OUTPUT		
CN38	OUTPUT 230V		
CN24	OUTPUT 230V		
CN37	OUTPUT 230V		
CN53	OUTPUT 0-12		
CN3	OUTPUT 0~5V	EEV	ELECTRONIC PANSION VALVE
CN26/CN27/CN29		T3	OUTDOOR COI TEMP SENSOR
CN1	INPUT 0~5V	T4	OUTDOOR AM ENT TEMP SENSOR
CN32/U/V/W	0~310V AC	TP	COMP DISCHARGE TEMP SENS

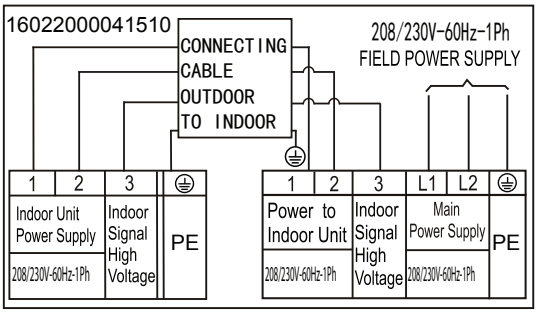

Indoor Unit: HW-UZ33-LA-Q

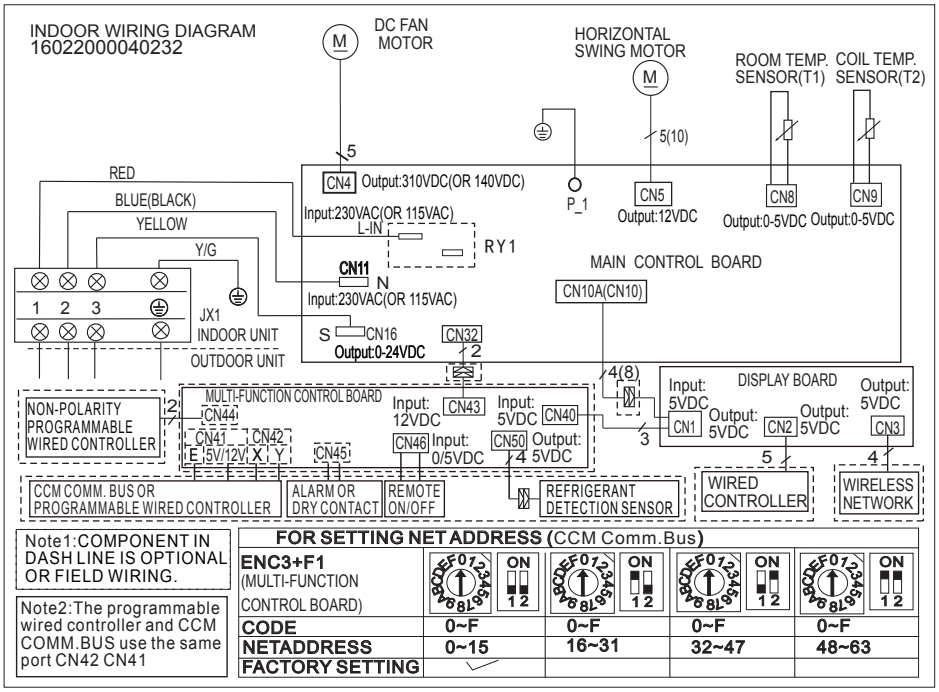

Note1:COMPONENT IN DASH LINE IS OPTIONAL OR FIELD WIRING.

Note2:The programmable wired controller and CCM COMM.BUS use the same port CN42 CN41

FOR SETTING NET ADDRESS (CCM Comm.Bus)

ENC3+F1 (MULTI-FUNCTION CONTROL BOARD)				
CODE	0~F	0~F	0~F	0~F
NETADDRESS	0~15	16~31	32~47	48~63
FACTORY SETTING	✓			

(Mitsutomo's products are subject to continuous improvements. Mitsutomo reserves the right to modify product design specifications and information in this data sheet without notice and without incurring any obligations)