Mitsutomo

FOUR-WAY CASSETTE

Service Manual

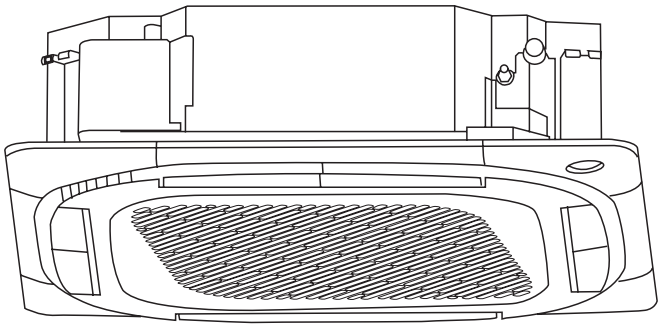

HC-UZ09-LA-Q

HC-UZ12-LA-Q

HC-UZ18-LA-Q

HC-UZ24-LA-Q

HC-UG36-LA-Q

HC-UG48-LA-Q

A2L

Table of Contents

1. Safety Precautions

1. Precautions
2. Information servicing

2. Indoor Unit

1. Feature
2. Dimensional Drawings
3. Part names
4. Service Place
5. Accessories
6 Air Velocity and Temperature Distributions
7. Sound Pressure Levels
8. Refrigerant System Diagram
9. Electrical Characteristics
10. Electrical Wiring Diagrams

3. Installation

4. Product Features

5. Troubleshooting

1. Safety Caution
2. General Troubleshooting
3. Information Inquiry
4. Error Diagnosis and Troubleshooting Without Error Code
5. Quick Maintenance by Error Code
6. Troubleshooting by Error Code
7. Check Procedures

Appendix

i) Temperature Sensor Resistance Value Table for TP (°C – K)
ii) Other Temperature Sensors Resistance Value Table (°C – K)
iii) Pressure On Service Port

Safety Precautions

Contents

1. Precautions.....2
2. Information servicing(For flammable materials).....4

1. Precautions

To prevent personal injury, or property or unit damage, adhere to all precautionary measures and instructions outlined in this manual. Before servicing a unit, refer to this service manual and its relevant sections.

Failure to adhere to all precautionary measures listed in this section may result in personal injury, damage to the unit or to property, or in extreme cases, death.

WARNING indicates a potentially hazardous situation which if not avoided could result in serious personal injury, or death.

CAUTION indicates a potentially hazardous situation which if not avoided could result in minor or moderate personal injury, or unit damage.

1.1 In case of Accidents or Emergency

WARNING

- If a gas leak is suspected, immediately turn off the gas and ventilate the area if a gas leak is suspected before turning the unit on.
- If strange sounds or smoke is detected from the unit, turn the breaker off and disconnect the power supply cable.
- If the unit comes into contact with liquid, contact an authorized service center.
- If liquid from the batteries makes contact with skin or clothing, immediately rinse or wash the area well with clean water.
- Do not insert hands or other objects into the air inlet or outlet while the unit is plugged in.
- Do not operate the unit with wet hands.
- Do not use a remote controller that has previously been exposed to battery damage or battery leakage.

CAUTION

- Clean and ventilate the unit at regular intervals when operating it near a stove or near similar devices.
- Do not use the unit during severe weather conditions. If possible, remove the product from the window before such occurrences.

1.2 Pre-Installation and Installation

WARNING

- Use this unit only on a dedicated circuit.
- Damage to the installation area could cause the unit to fall, potentially resulting in personal injury, property damage, or product failure.
- Only qualified personnel should disassemble, install, remove, or repair the unit.
- Only a qualified electrician should perform electrical work. For more information, contact your dealer, seller, or an authorized service center.

CAUTION

- While unpacking be careful of sharp edges around the unit as well as the edges of the fins on the condenser and evaporator.

1.3 Operation and Maintenance

WARNING

- Do not use defective or under-rated circuit breakers.
- Ensure the unit is properly grounded and that a dedicated circuit and breaker are installed.
- Do not modify or extend the power cable. Ensure the power cable is secure and not damaged during operation.
- Do not unplug the power supply plug during operation.
- Do not store or use flammable materials near the unit.
- Do not open the inlet grill of the unit during operation.
- Do not touch the electrostatic filter if the unit is equipped with one.
- Do not block the inlet or outlet of air flow to the unit.
- Do not use harsh detergents, solvents, or similar items to clean the unit. Use a soft cloth for cleaning.
- Do not touch the metal parts of the unit when removing the air filter as they are very sharp.
- Do not step on or place anything on the unit or outdoor units.
- Do not drink water drained from the unit
- Avoid direct skin contact with water drained from the unit.
- Use a firm stool or step ladder according to manufacturer procedures when cleaning or maintaining the unit.

CAUTION

- Do not install or operate the unit for an extended period of time in areas of high humidity or in an environment directly exposing it to sea wind or salt spray.
- Do not install the unit on a defective or damaged installation stand, or in an unsecure location.
- Ensure the unit is installed at a level position
- Do not install the unit where noise or air discharge created by the outdoor unit will negatively impact the environment or nearby residences.
- Do not expose skin directly to the air discharged by the unit for prolonged periods of time.
- Ensure the unit do not operate in areas water or other liquids.
- Ensure the drain hose is installed correctly to ensure proper water drainage.
- When lifting or transporting the unit, it is recommended that two or more people are used for this task.
- When the unit is not to be used for an extended time, disconnect the power supply or turn off the breaker.

WARNING For Using Flammable Refrigerant

1. Installation(where refrigerant pipes are allowed)
- Any person who is involved with working on or breaking into a refrigerant circuit should hold a current valid certificate from an industry-accredited assessment authority, which authorises their competence to handle refrigerants safely in accordance with an industry recognised assessment specification.
- Maintenance and repair requiring the assistance of other skilled personnel shall be carried out under the supervision of the person competent in the use of flammable refrigerants.
- That the installation of pipe-work shall be kept to a minimum.
- That pipe-work shall be protected from physical damage.
- Where refrigerant pipes shall be compliance with national gas regulations.
- That mechanical connections shall be accessible for maintenance purposes.
- Be more careful that foreign matter(oil, water,etc) does not enter the piping.
  Also, when storing the piping, securely seal the opening by pinching, taping, etc.
- Appliance shall be stored in a well ventilated area where the room size corresponds to the room area as specifiec for operation.
- Appliance shall be stored in a well ventilated area where the room size corresponds to the room area as specifiec for operation.
- Joints shall be tested with detection equipment with a capability of 5 g/year of refrigerant or better, with the equipment in standstill and under operation or under a pressure of at least these standstill or operation conditions after installation. Detachable joints shall NOT be used in the indoor side of the unit(brazed, welded joint could be used).
- In cases that require mechanical ventilation, ventilation openings shall be kept clear of obstruction.

2. When a FLAMMABLE REFRIGERANT is used, the requirements for installation space of appliance and /or ventilation requirements are determined according to
- the mass charge amount(M) used in the appliance,
- the installation location,
- the type of ventilation of the location or of the appliance.
- piping material, pipe routing, and installation shall include protection from physical damage in operation and service, and be in compliance with national and local codes and standards, such as ASHRAE 15, IAPMO Uniform Mechanical Code, ICC International Mechanical Code, or CSA B52. All field joints shall be accessible for inspection prior to being covered or enclosed.
- that protection devices, piping, and fittings shall be protected as far as possible against adverse environmental efects, for example, the danger of water collecting and freezing in relief pipes or the accumulation of dirt and debris;
- that piping in refrigeration systems shall be so designed and installed to minimize the likelihood of hydraulic shock damaging the system;
- that steel pipes and components shall be protected against corrosion with a rustproof coating before applying any insulation;
- that precautions shall be taken to avoid excessive vibration or pulsation;
- the minimum floor area of the room shall be mentioned in the form of a table or a single figure without reference to a formula;
- after completion of field piping for split systems, the field pipework shall be pressure tested with an inert gas and then vacuum tested prior to refrigerant charging, according to the following requirements:

a. The minimum test pressure for the low side of the system shall be the low side design pressure and the minimum test pressure for the high side of the system shall be the high side design pressure, unless the high side of the system can not be isolated from the low side of the system in which case the entire system shall be pressure tested to the low side design pressure.
b. The test pressure after removal of pressure source shall be maintained for at least 1 h with no decrease of pressure indicated by the test gauge, with test gauge resolution not exceeding 5% of the test pressure.
c. During the evacuation test, after achieving a vacuum level specified in the manual or less, the refrigeration system shall be isolated from the vacuum pump and the pressure shall not rise above 1500 microns within 10 min. The vacuum pressure level shall be specified in the manual, and shall be the lessor of 500 microns or the value required for compliance with national and local codes and standards, which may vary between residential, commercial,and industrial buildings.

-- field-made refrigerant joints indoors shall be tightness tested according to the following requirements: The test method shall have a sensitivity of 5 grams per year of refrigerant or better under a pressure of at least 0,25 times the maximum allowable pressure. No leak shall be detected.
-- Any servicing shall be performed only as recommended by the manufacturer.

3. Qualification of workers
Any maintenance, service and repair operations must be required qualification of the working personnel. Every working procedure that afects safety means shall only be carried out by competent persons that joined the training and achieved competence should be documented by a certificate. The training of these procedures is carried out by national training organizations or manufacturers that are accredited to teach the relevant national competency standards that may be set in legislation. All training shall follow the ANNEX HH requirements of UL 60335-2-40 4th Edition.

Examples for such working procedures are:
- breaking into the refrigerating circuit;
- opening of sealed components;
- opening of ventilated enclosures.

2. Information servicing(For flammable materials)

2.1 Checks to the area

- Prior to beginning work on systems containing flammable refrigerants, safety checks are necessary to ensure that the risk of ignition is minimized. For repair to the refrigerating system, the following precautions shall be complied with prior to conducting work on the system.

2.2 Work procedure

- Work shall be undertaken under a controlled procedure so as to minimise the risk of a flammable gas or vapour being present while the work is being performed.

2.3 General work area

- All maintenance staff and others working in the local area shall be instructed on the nature of work being carried out. Work in confined spaces shall be avoided.

2.4 Checking for presence of refrigerant

- The area shall be checked with an appropriate refrigerant detector prior to and during work, to ensure the technician is aware of potentially flammable atmospheres.
- Ensure that the leak detection equipment being used is suitable for use with flammable refrigerants, i.e. no sparking, adequately sealed or intrinsically safe.

2.5 Presence of fire extinguisher

- If any hot work is to be conducted on the refrigeration equipment or any associated parts, appropriate fire extinguishing equipment shall be available to hand. Have a dry powder or CO2 fire extinguisher adjacent to the charging area.

2.6 No ignition sources

- No person carrying out work in relation to a REFRIGERATING SYSTEM which involves exposing any pipe work shall use any sources of ignition in such a manner that it may lead to the risk of fire or explosion. All possible ignition sources, including cigarette smoking, should be kept sufciently far away from the site of installation, repairing, removing and disposal, during which refrigerant can possibly be released to the surrounding space. Prior to work taking place, the area around the equipment is to be surveyed to make sure that there are no flammable hazards or ignition risks.
- "No Smoking" signs shall be displayed.

2.7 Ventilated area

- Ensure that the area is in the open or that it is adequately ventilated before breaking into the system or conducting any hot work. A degree of ventilation shall continue during the period that the work is carried out. The ventilation should safely disperse any released refrigerant and preferably expel it externally into the atmosphere.

2.8 Checks to the refrigeration equipment

- Where electrical components are being changed, they shall be fit for the purpose and to the correct specification. At all times the manufacturer's maintenance and service guidelines shall be followed. If in doubt consult the manufacturer's technical department for assistance. The following checks shall be applied to installations using FLAMMABLE REFRIGERANTS:
  - the actual refrigerant charge is in accordance with the room size within which the refrigerant containing parts are installed;
  - the ventilation machinery and outlets are operating adequately and are not obstructed;
  - if an indirect refrigerating circuit is being used, the secondary circuits shall be checked for the presence of refrigerant;
  - marking to the equipment continues to be visible and legible, marking and signs that are illegible shall be corrected;
  - refrigeration pipe or components are installed in a position where they are unlikely to be exposed to any substance which may corrode refrigerant containing components, unless the components are constructed of materials which are inherently resistant to being corroded or are suitably protected against being so corroded.

2.9 Checks to electrical devices

- Repair and maintenance to electrical components shall include initial safety checks and component inspection procedures. If a fault exists that could compromise safety, then no electrical supply shall be connected to the circuit until it is satisfactorily dealt with. If the fault cannot be corrected immediately but it is necessary to continue operation, an adequate temporary solution shall be used. This shall be reported to the owner of the equipment so all parties are advised.

Initial safety checks shall include:

- that capacitors are discharged: this shall be done in a safe manner to avoid possibility of sparking;
- that there no live electrical components and wiring are exposed while charging, recovering or purging the system;
- that there is continuity of earth bonding.

2.10 Sealed electrical components shall be replaced

2.11 Intrinsically safe components must be replaced

2.12 Cabling

- Check that cabling will not be subject to wear, corrosion, excessive pressure, vibration, sharp edges or any other adverse environmental effects. The check shall also take into account the effects of aging or continual vibration from sources such as compressors or fans.

2.13 Detection of flammable refrigerants

- Under no circumstances shall potential sources of ignition be used in the searching for or detection of refrigerant leaks. A halide torch (or any other detector using a naked flame) shall not be used.
- The following leak detection methods are deemed acceptable for refrigerant systems. Electronic leak detectors may be used to detect refrigerant leaks but, in the case of FLAMMABLE REFRIGERANTS, the sensitivity may not be adequate, or may need re-calibration. (Detection equipment shall be calibrated in a refrigerant-free area.) Ensure that the detector is not a potential source of ignition and is suitable for the refrigerant used. Leak detection equipment shall be set at a percentage of the LFL of the refrigerant and shall be calibrated to the refrigerant employed, and the appropriate percentage of gas (25 % maximum) is confirmed. Leak detection fluids are also suitable for use with most refrigerants but the use of detergents containing chlorine shall be avoided as the chlorine may react with the refrigerant and corrode the copper pipe-work.

NOTE Examples of leak detection fluids are

- bubble method,

- fluorescent method agents.

- If a leak is suspected, all naked flames shall be removed/ extinguished.
- If a leakage of refrigerant is found which requires brazing, all of the refrigerant shall be recovered from the system, or isolated (by means of shut of valves) in a part of the system remote from the leak. See the following instructions of removal of refrigerant.

2.14 Removal and evacuation

- When breaking into the refrigerant circuit to make repairs or for any other purpose, conventional procedures shall be used. However, it is important that best practice is followed since flammability is a consideration.
- The following procedure shall be adhered to:
  - safely remove refrigerant following local and national regulations;
  - evacuate;
  - purge the circuit with inert gas(optional for A2L);
  - evacuate(optional for A2L);
  - continuously flush or purge with inert gas when using flame to open circuit; and open the circuit;
- The refrigerant charge shall be recovered into the correct recovery cylinders if venting is not allowed by local and national codes. For appliances containing flammable refrigerants, the system shall be purged with oxygen-free nitrogen to render the appliance safe for flammable refrigerants. This process might need to be repeated several times. Compressed air or oxygen shall not be used for purging refrigerant systems.
- For appliances containing flammable refrigerants, refrigerants purging shall be achieved by breaking the vacuum in the system with oxygen-free nitrogen and continuing to fill until the working pressure is achieved, then venting to atmosphere, and finally pulling down to a vacuum (optional for A2L). This process shall be repeated until no refrigerant is within the system (optional for A2L). When the final oxygen-free nitrogen charge is used, the system shall be vented down to atmospheric pressure to enable work to take place.
- The outlet for the vacuum pump shall not be close to any potential ignition sources, and ventilation shall be available.

2.15 Charging procedures

- In addition to conventional charging procedures, the following requirements shall be followed:
  - Works shall be undertaken with appropriate tools only (In case of uncertainty, please consult the manufacturer of the tools for use with flammable refrigerants)
  - Ensure that contamination of different refrigerants does not occur when using charging equipment. Hoses or lines shall be as short as possible to minimize the amount of refrigerant contained in them.
  - Cylinders shall be kept upright.
  - Ensure that the refrigeration system is earthed prior to charging the system with refrigerant.
  - Label the system when charging is complete(if not already).
  - Extreme care shall be taken not to overfill the refrigeration system.
  - Prior to recharging the system it shall be pressure tested with OFN. The system shall be leak tested on completion of charging but prior to commissioning. A follow up leak test shall be carried out prior to leaving the site.

2.16 Decommissioning

Before carrying out this procedure, it is essential that the technician is completely familiar with the equipment and all its detail. It is recommended good practice that all refrigerants are recovered safely. Prior to the task being carried out, an oil and refrigerant sample shall be taken in case analysis is required prior to re-use of recovered refrigerant. It is essential that electrical power is available before the task is commenced.

- Become familiar with the equipment and its operation.
- Isolate system electrically.
- Before attempting the procedure ensure that:
  - mechanical handling equipment is available, if required, for handling refrigerant cylinders;
  - all personal protective equipment is available and being

used correctly;

- the recovery process is supervised at all times by a competent person;
- recovery equipment and cylinders conform to the appropriate standards.

- Pump down refrigerant system, if possible.
- If a vacuum is not possible, make a manifold so that refrigerant can be removed from various parts of the system.
- Make sure that cylinder is situated on the scales before recovery takes place.
- Start the recovery machine and operate in accordance with manufacturer's instructions.
- Do not overfill cylinders. (No more than 80 % volume liquid charge).
- Do not exceed the maximum working pressure of the cylinder, even temporarily.
- When the cylinders have been filled correctly and the process completed, make sure that the cylinders and the equipment are removed from site promptly and all isolation valves on the equipment are closed off.
- Recovered refrigerant shall not be charged into another refrigeration system unless it has been cleaned and checked.

2.17 Labelling

- Equipment shall be labelled stating that it has been de-commissioned and emptied of refrigerant. The label shall be dated and signed. For appliances containing FLAMMABLE REFRIGERANTS, ensure that there are labels on the equipment stating the equipment contains FLAMMABLE REFRIGERANT.

2.18 Recovery

- When removing refrigerant from a system, either for servicing or decommissioning,
- it is recommended good practice that all refrigerants are removed safely.
- When transferring refrigerant into cylinders, ensure that only appropriate refrigerant recovery cylinders are employed. Ensure that the correct number of cylinders for holding the total system charge is available. All cylinders to be used are designated for the recovered refrigerant and labelled for that refrigerant (i. e. special cylinders for the recovery of refrigerant). Cylinders shall be complete with pressure-relief valve and associated shut-of valves in good working order. Empty recovery cylinders are evacuated and, if possible,cooled before recovery occurs.
- The recovery equipment shall be in good working order with a set of instructions concerning the equipment that is at hand and shall be suitable for the recovery of the flammable refrigerant. If in doubt the manufacturer should be consulted. In addition, a set of calibrated weighing scales shall be available and in good working order. Hoses shall be complete with leak-free disconnect couplings and in good condition.
- The recovered refrigerant shall be processed according to local legislation in the correct recovery cylinder, and the relevant waste transfer note arranged. Do not mix refrigerants in recovery units and especially not in cylinders.
- If compressors or compressor oils are to be removed, ensure that they have been evacuated to an acceptable level to make certain that flammable refrigerant does not remain within the lubricant. The compressor body shall not be heated by an open flame or other ignition sources to accelerate this process. When oil is drained from a system, it shall be carried out safely.

2.19 Transportation, marking and storage for units

1. Transport of equipment containing flammable refrigerants

   Compliance with the transport regulations

2. Marking of equipment using signs

   Compliance with local regulations

3. Disposal of equipment using flammable refrigerants

   Compliance with national regulations

4. Storage of equipment/appliances

   The storage of equipment should be in accordance with the manufacturer's instructions.

5. Storage of packed (unsold) equipment

   Storage package protection should be constructed such that mechanical damage to the equipment inside the package will not cause a leak of the refrigerant charge. The maximum number of pieces of equipment permitted to be stored together will be determined by local regulations.

Indoor Unit-Four-way Cassette

Contents

1. Feature.....2
2. Dimensional Drawings.....5
3. Part names.....7
4. Service Place.....7
5. Accessories.....8
6 Air Velocity and Temperature Distributions.....9
7. Sound Pressure Levels.....21
8. Refrigerant System Diagram.....23
9. Electrical Characteristics.....24
10. Electrical Wiring Diagrams.....24

1. Feature

Compact Cassette(9K-18K)

1.1 Nearly 360° Air Discharge for the Highest Efficiency and Comfort

- With near to 360° air discharge deliver even and powerful air flow, you will never be bothered by harsh, cold air draughts. Enjoy a real immersive air in open space.

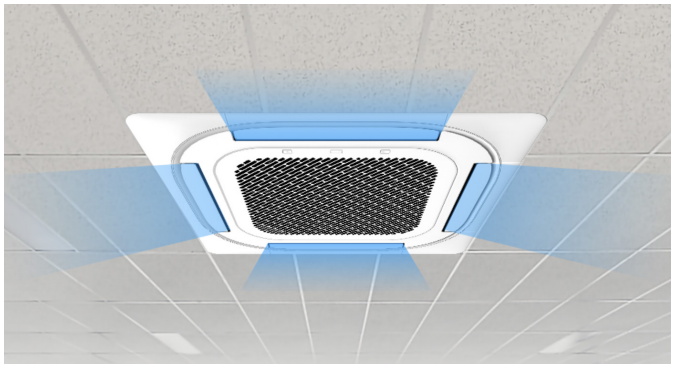

1.2 Fresh Air

- There is a reserved fresh air port to bring in fresh air from outside, keeping the indoor air fresh and healthy.
- The indoor unit PCB is also standard with a New Fan connection ports(CN8) to provide 220V power to external fan motor less than 200W.

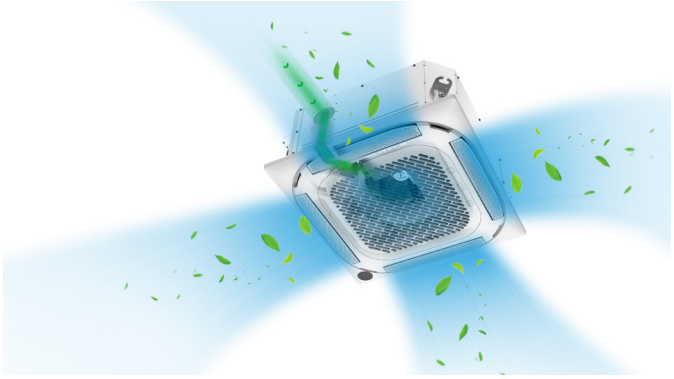

New four-way Cassette((24K~48K)

1.1 360° Air Flow

- 360°directional wind can deliver air evenly throughout every corner in any space, reducing hot and cold spots in the room.

1.2 Easy Installation

- The Cassette is much slimmer due to the redesigned heat exchanger and overall structures. It now requires less space for installation.

1.3 Reserved remote on-off and alarm ports(Optional for fixed-speed units, standard for inverter units)

- Remote on-off: With the reserved ports. a remote switch can be easily connected to realize remote control.
- Alarm: The built-in PCB can output alarm signal, which achieve setting up an external alarm light or vibration gauge possible.

1.4 Fresh Air

- Fresh air intake function brings you fresh and comfortable air feeling.

1.5 Wired Controller(Optional)

- Compared with infrared remote controller, wired controller can be fixed on the wall and avoid mislaying. It's mainly used for commercial zone and makes air conditioner control more convenient.

1.6 Build-in Drain Pump

- The drain pump can lift the condensed water up to 1000mm. Which is convenient to install drainage pipes under most conditions. The drainage pipe can be installed on either the left or the right side.

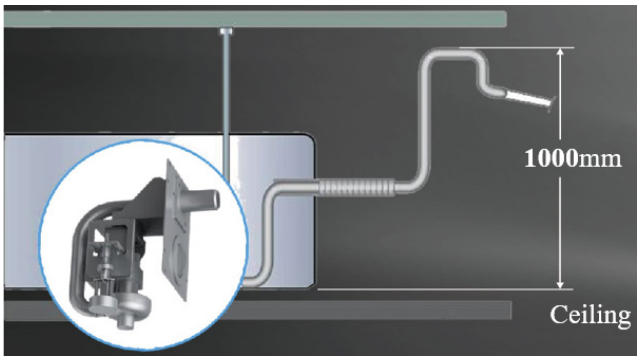

2. Dimensional Drawings

9K~18K

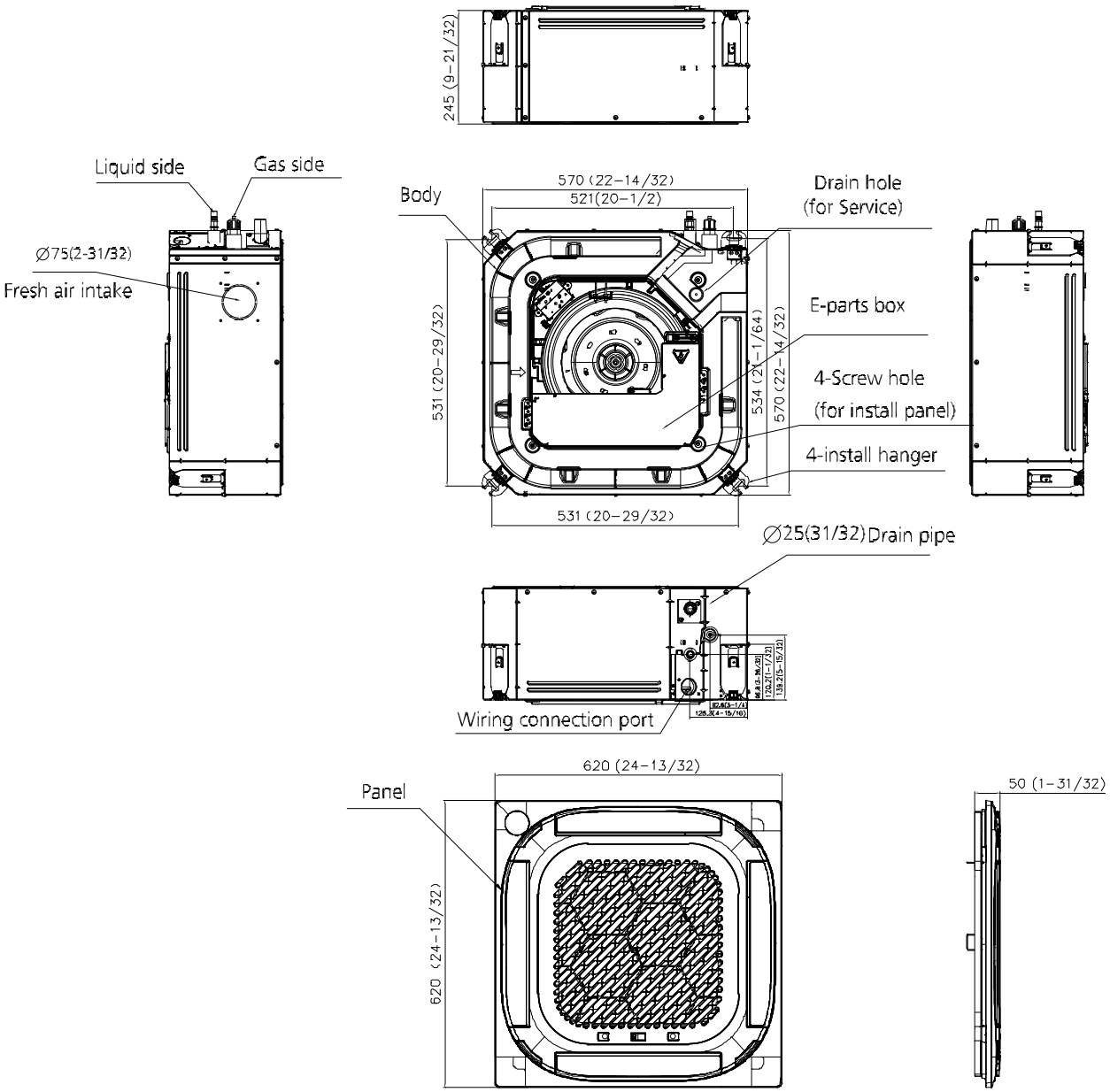
245 (9-21/32)
Liquid side
Gas side
∅75(2-31/32)
Fresh air intake
Body
570 (22-14/32)
521(20-1/2)
Drain hole
(for Service)
E-parts box
4-Screw hole
(for install panel)
4-install hanger
531 (20-29/32)
534 (21-1/64)
570 (22-14/32)
531 (20-29/32)
∅25(31/32) Drain pipe
Wiring connection port
Panel
620 (24-13/32)
620 (24-13/32)
50 (1-31/32)

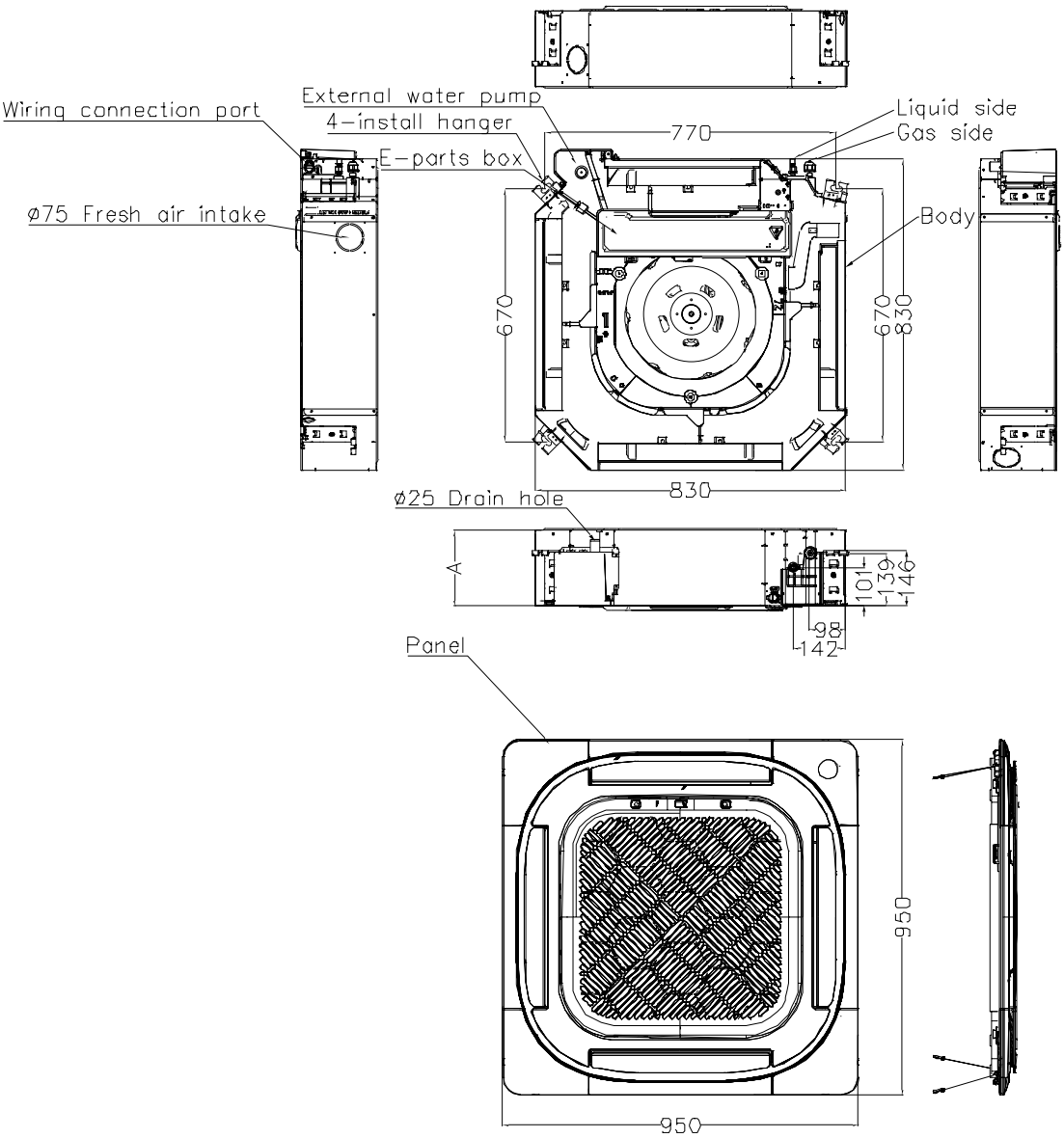

Model (KBtu/h)	Unit	A
24	mm	205
	inch	8.07
36	mm	245
	inch	9.65
48	mm	287
	inch	11.30

3. Part names

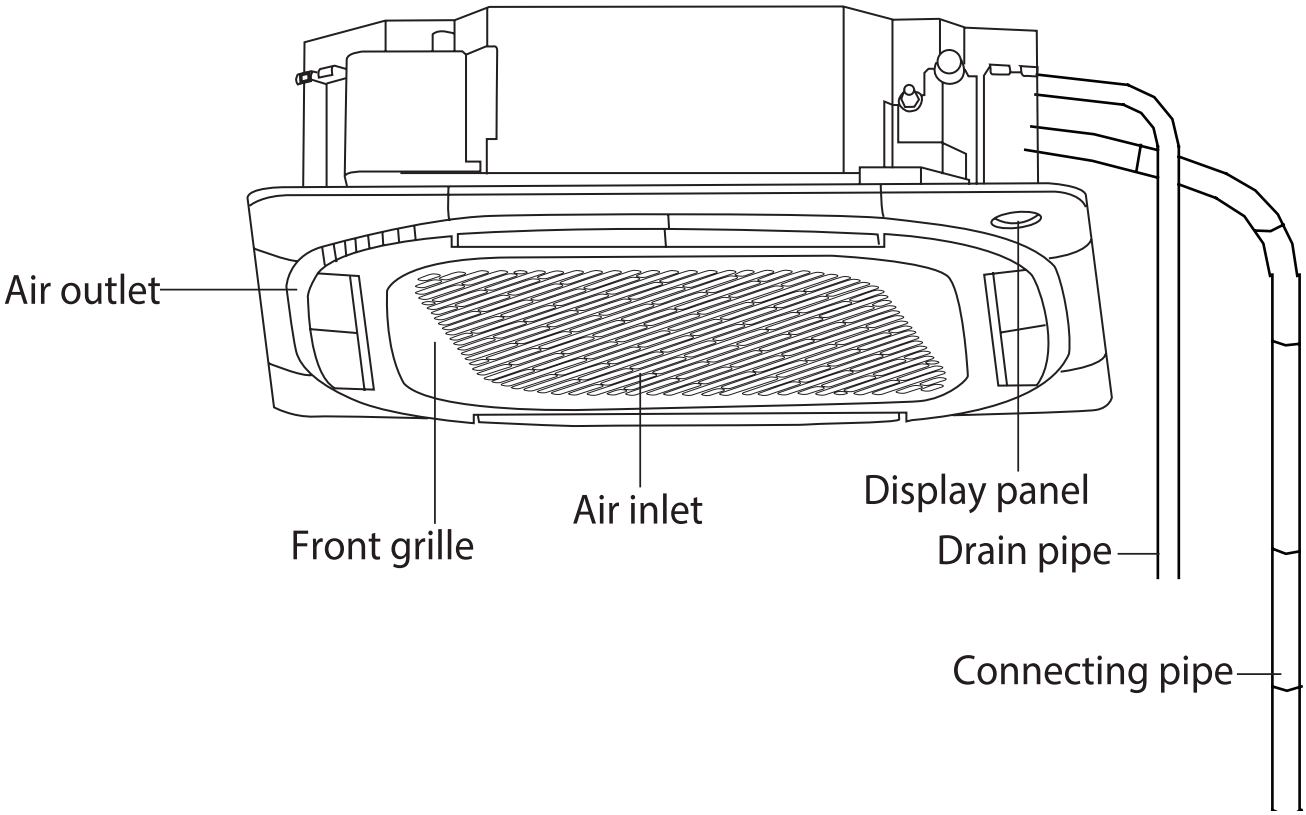

4. Service Place

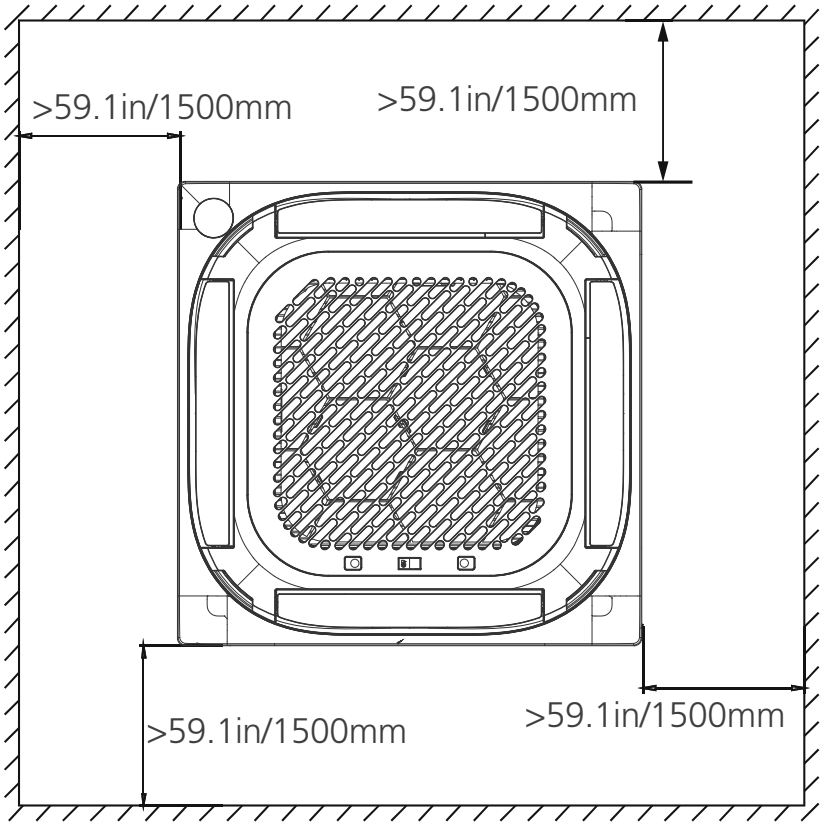

5. Accessories

The air conditioning system comes with the following accessories. Use all of the installation parts and accessories to install the air conditioner. Improper installation may result in water leakage, electrical shock and fire, or equipment failure.

Name	Shape	Quantity
Manual		3
Soundproof/insulation sheath (24K/36K/48K)		1
Soundproof/insulation sheath (24K/36K/48K)		1
Outlet pipe sheath(24K/36K/48K)		1
Bolt(24K/36K/48K)		6
Remote controller		1
Magnetic ring (9K/12K/18K)		2
Wireless module cable	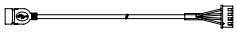	1
Remote controller holder(purchase separately)		1
Drain joint		1
Seal ring		1
Copper nut		2
Tapping screws		6(24K/36K/48K) /2(9K/12K/18K)
Throat bander		2
Conduit installation plate		1
Anti-shock rubber		1
Dry battery AAA		2
Rubber block(24K/36K/48K)		1

Optional accessories:

- There are two types of remote controls: wired and wireless.
- Select a remote controller based on customer preferences and requirements and install in an appropriate place.
- Refer to catalogues and technical literature for guidance on selecting a suitable remote controller.

6. Air Velocity and Temperature Distributions

9k-Discharge Angle 50°

Cooling airflow velocity distributions

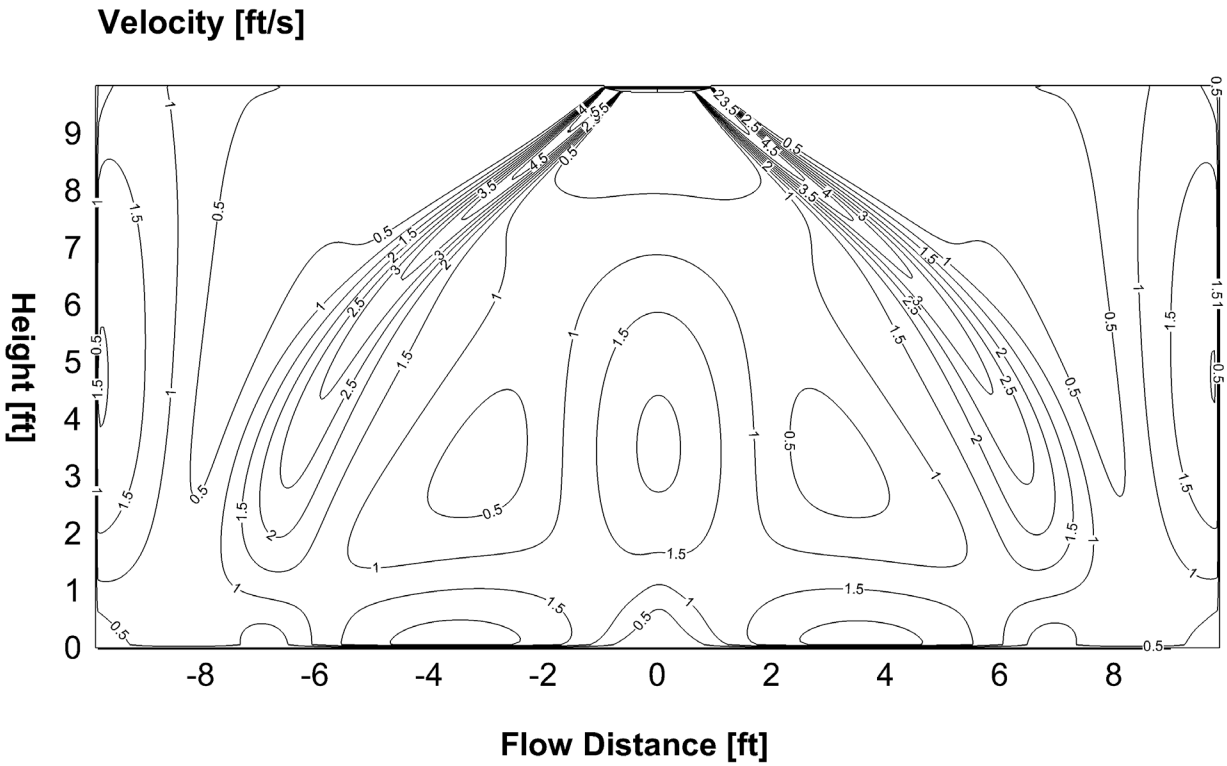

Cooling temperature distributions

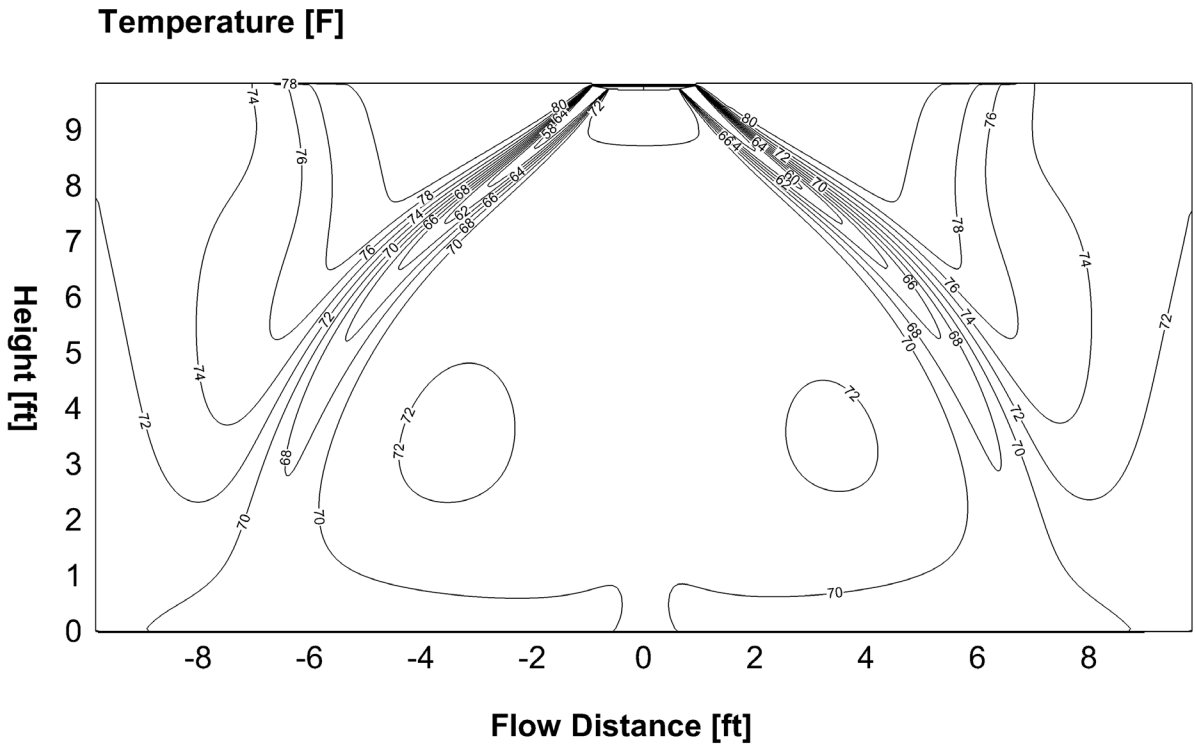

9k-Discharge Angle 65°

Heating airflow velocity distributions

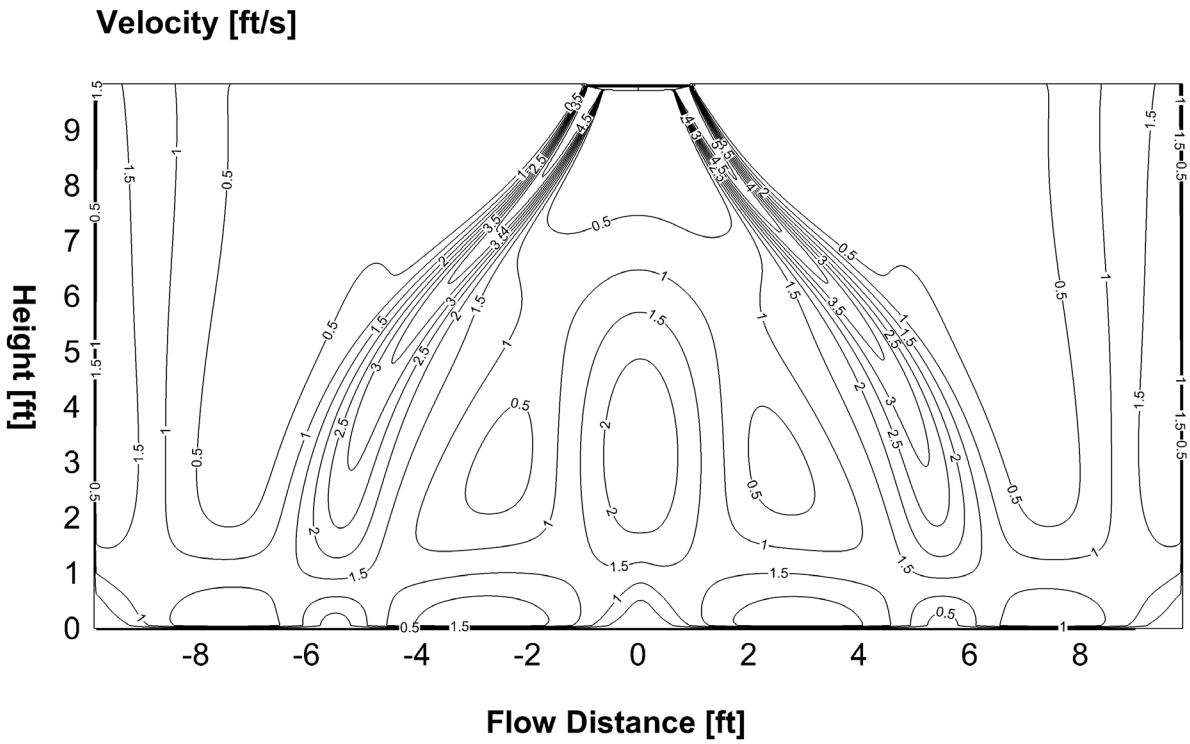

Heating temperature distributions

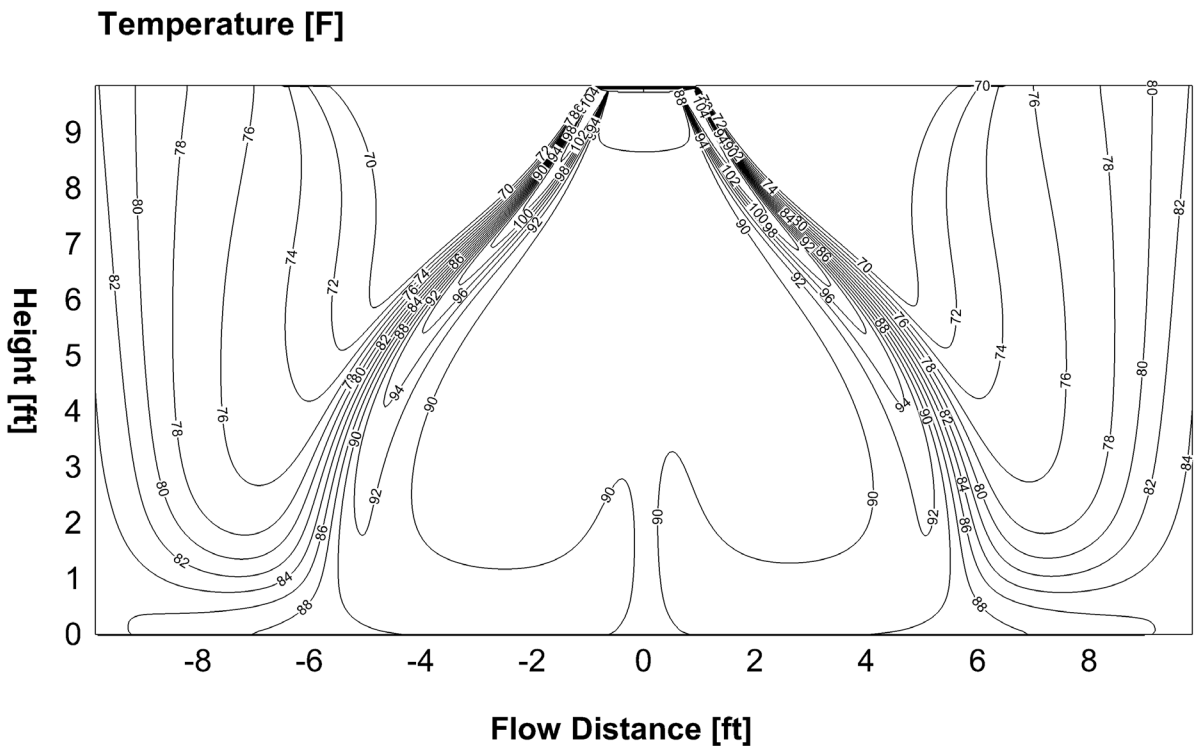

12k-Discharge Angle 50°

Cooling airflow velocity distributions

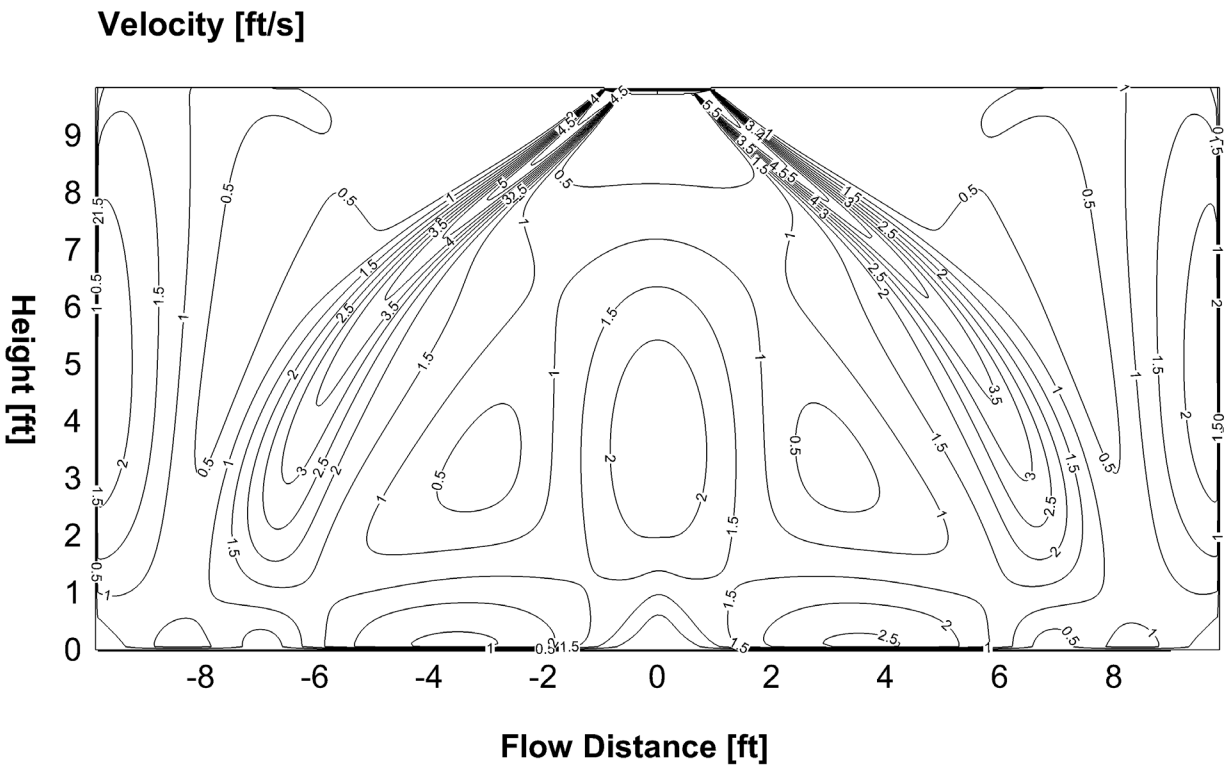

Cooling temperature distributions

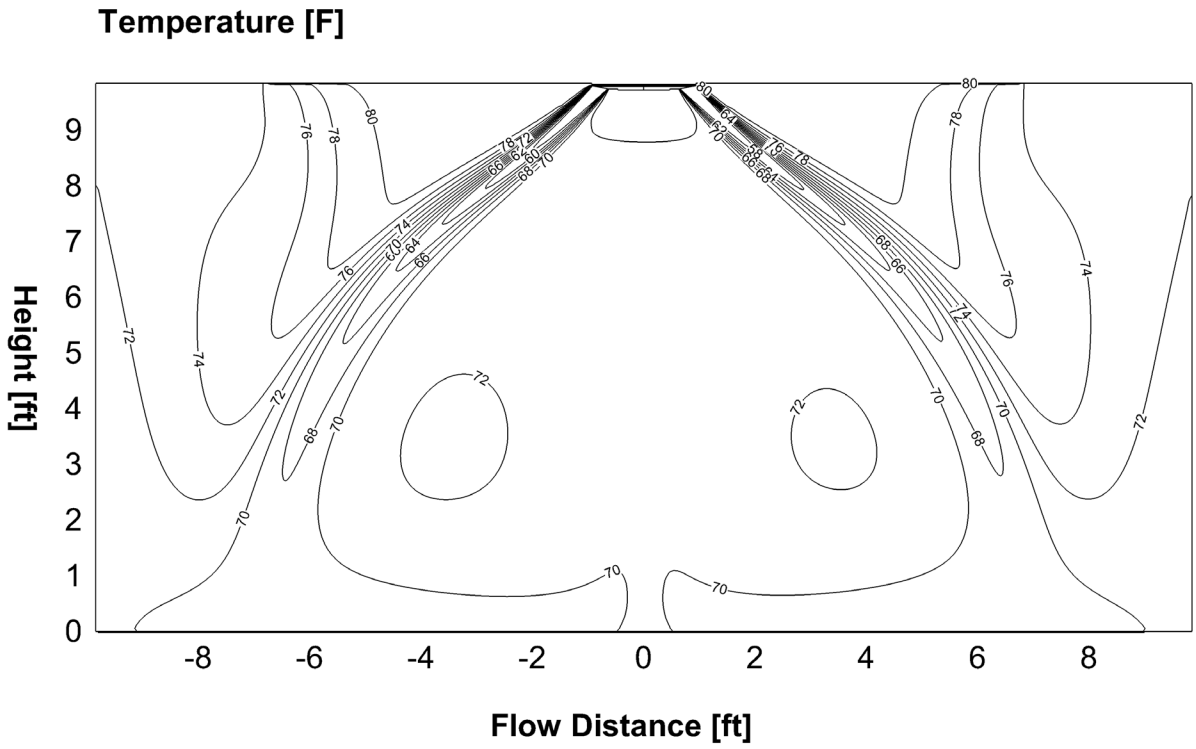

12k-Discharge Angle 65°

Heating airflow velocity distributions

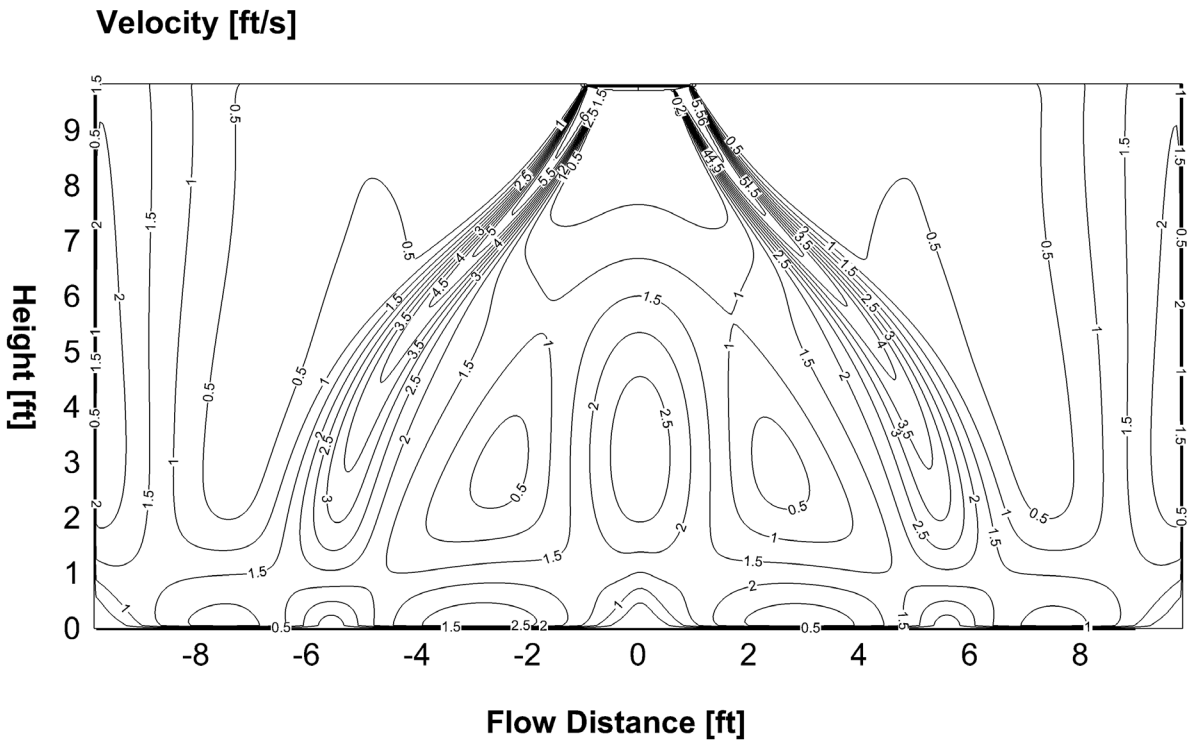

Heating temperature distributions

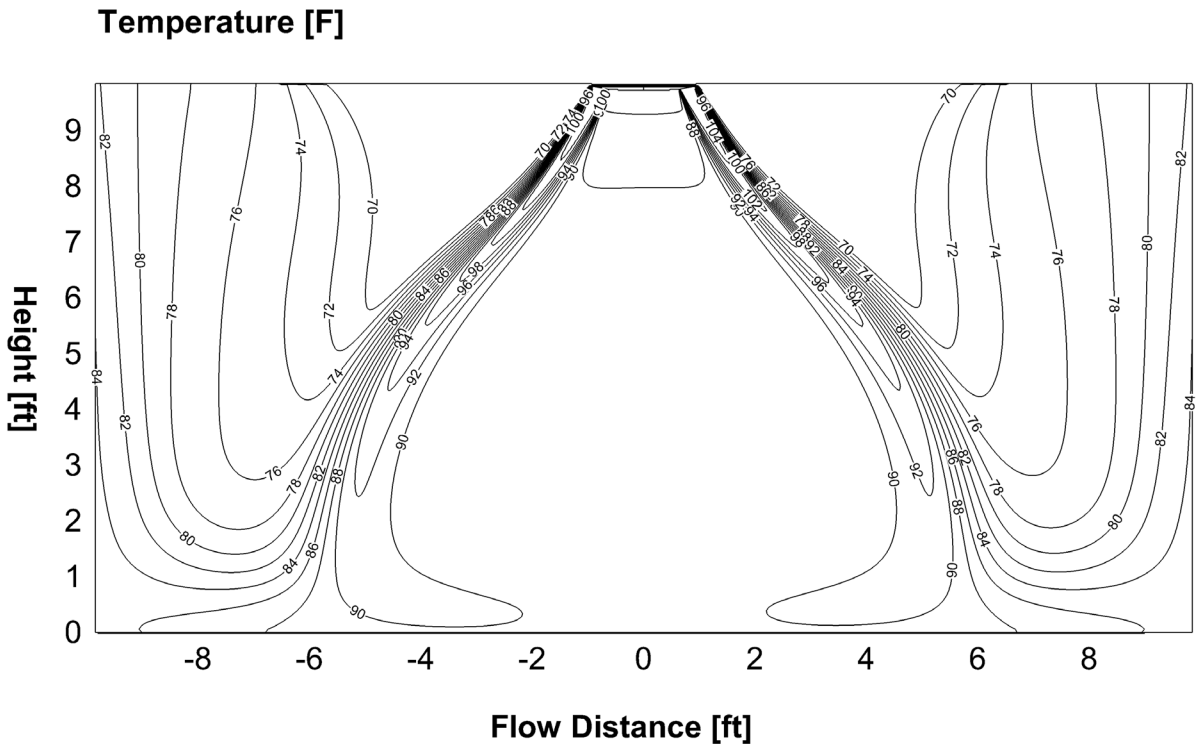

18k-Discharge Angle 50°

Cooling airflow velocity distributions

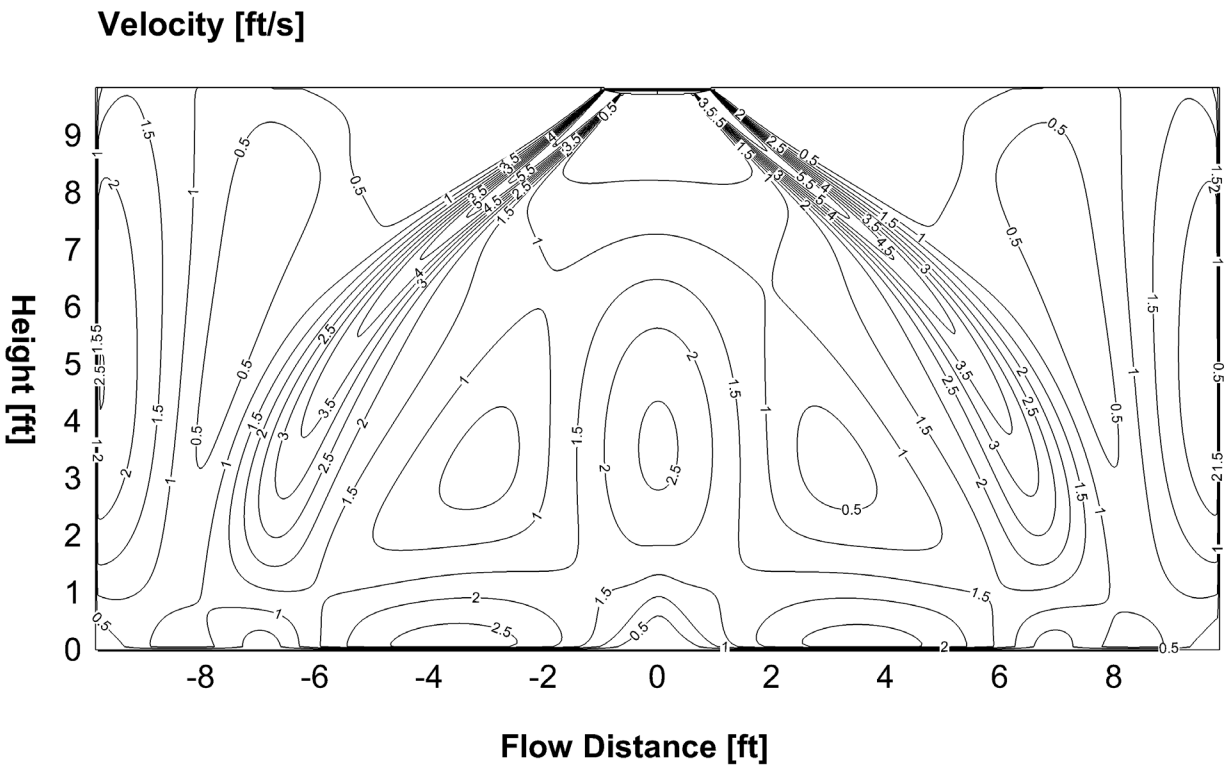

Cooling temperature distributions

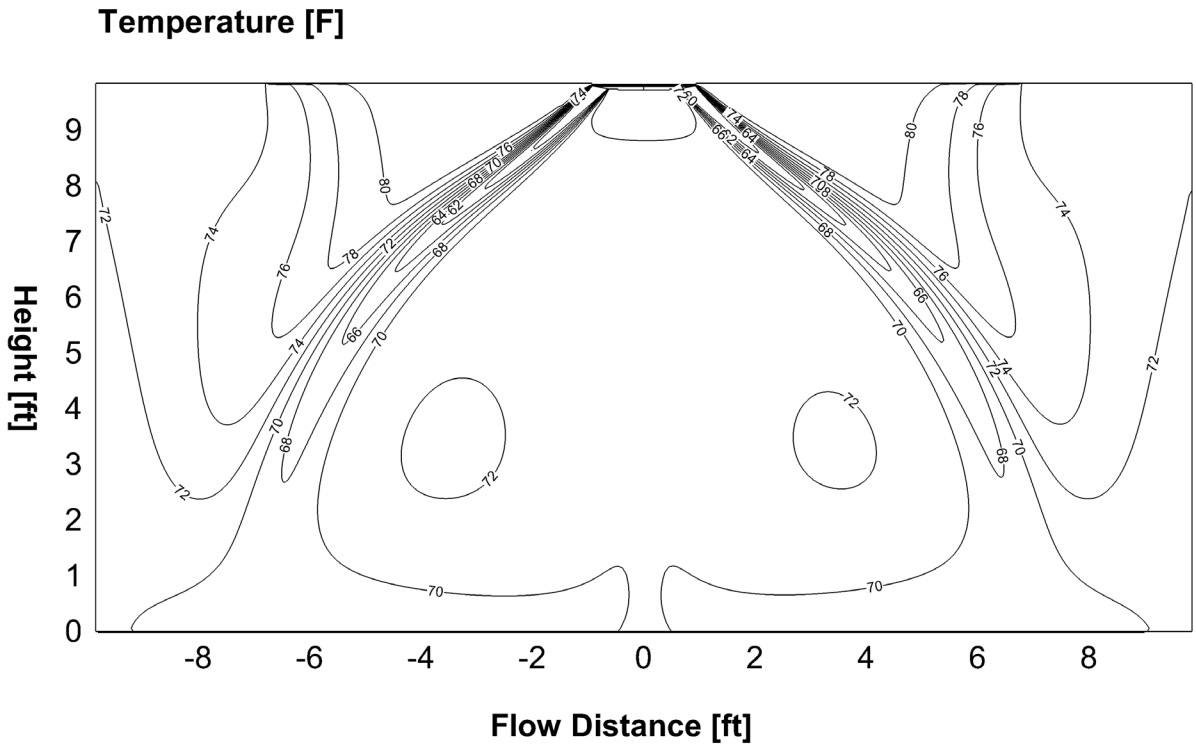

18k-Discharge Angle 65°

Heating airflow velocity distributions

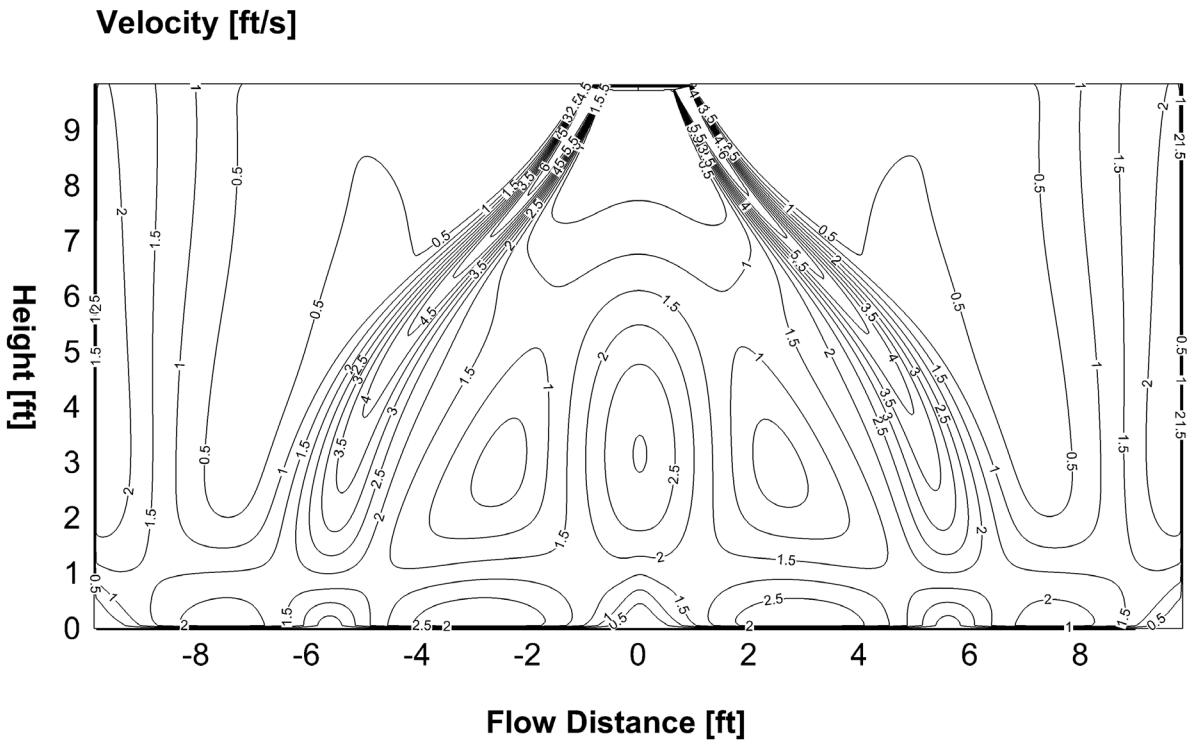

Heating temperature distributions

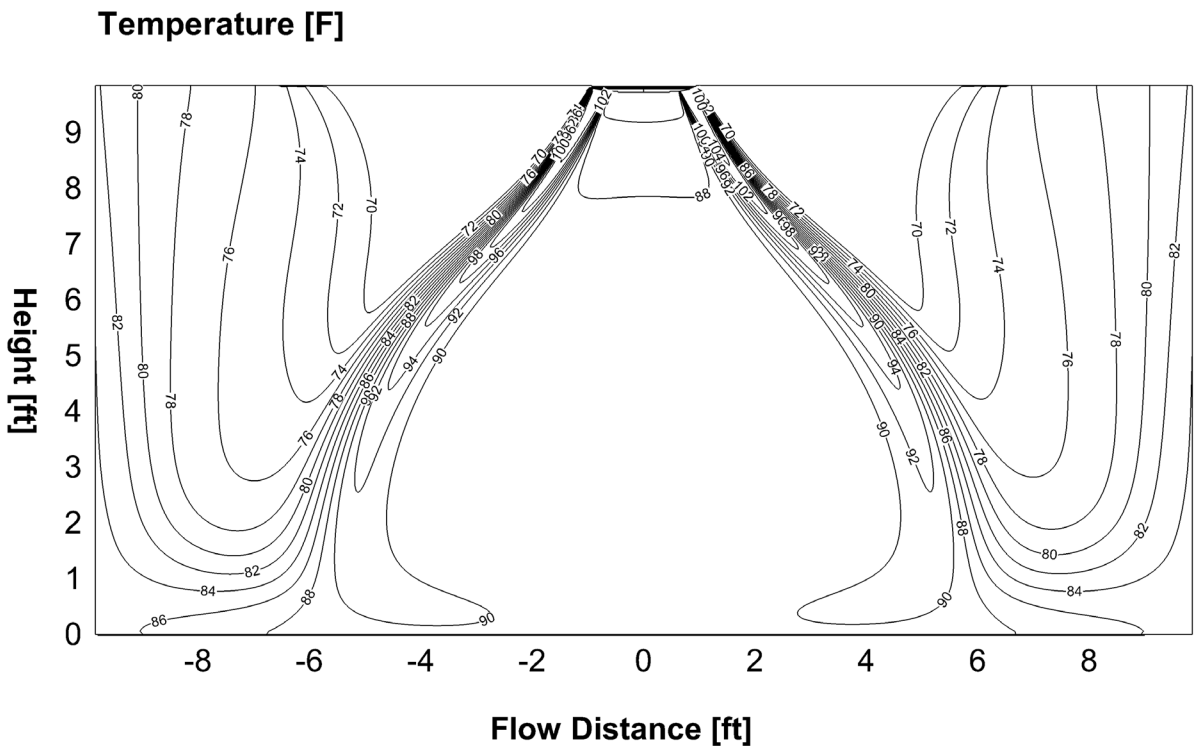

24k-Discharge Angle 50°

Cooling airflow velocity distributions

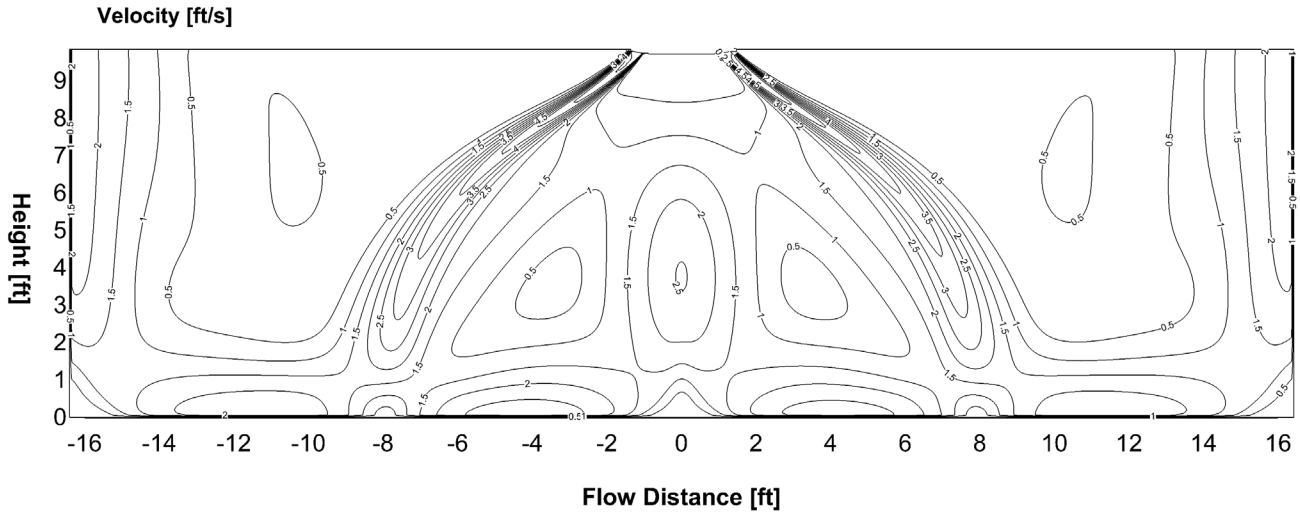

Cooling temperature distributions

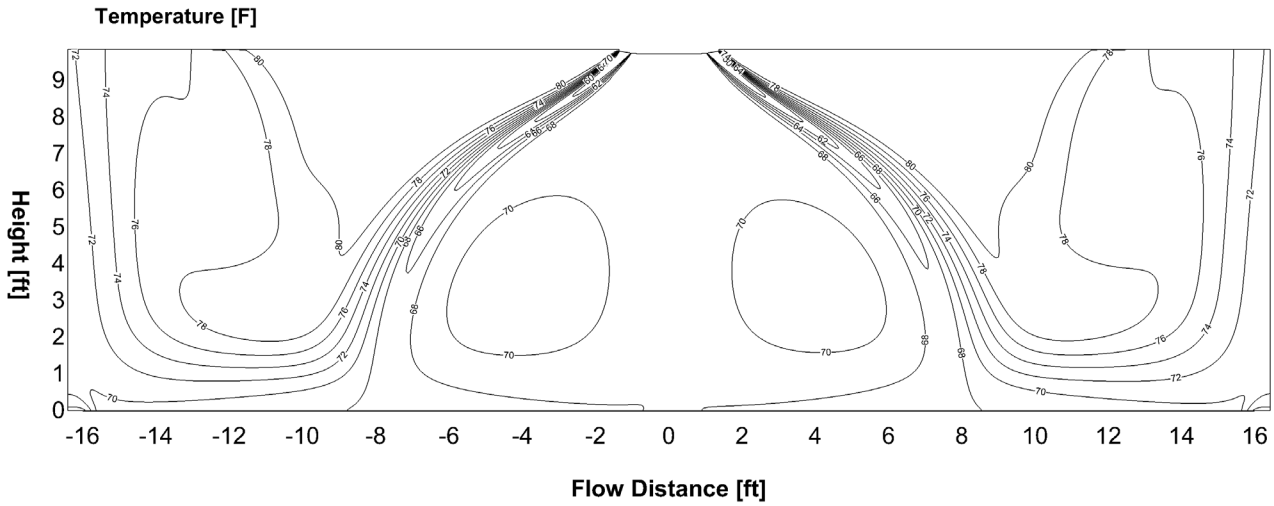

24k-Discharge Angle 65°

Heating airflow velocity distributions

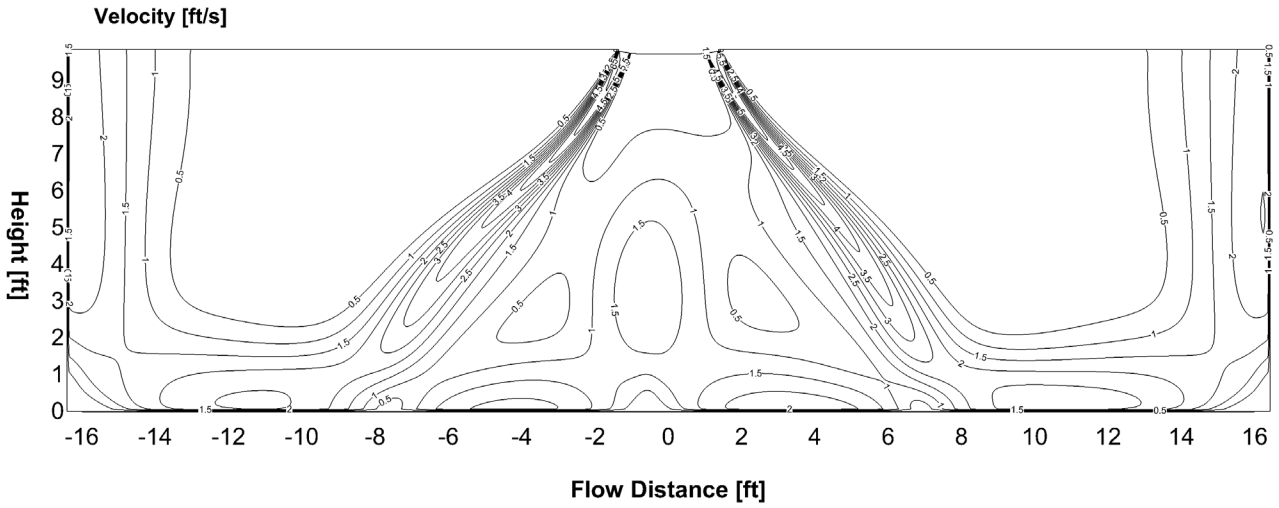

Heating temperature distributions

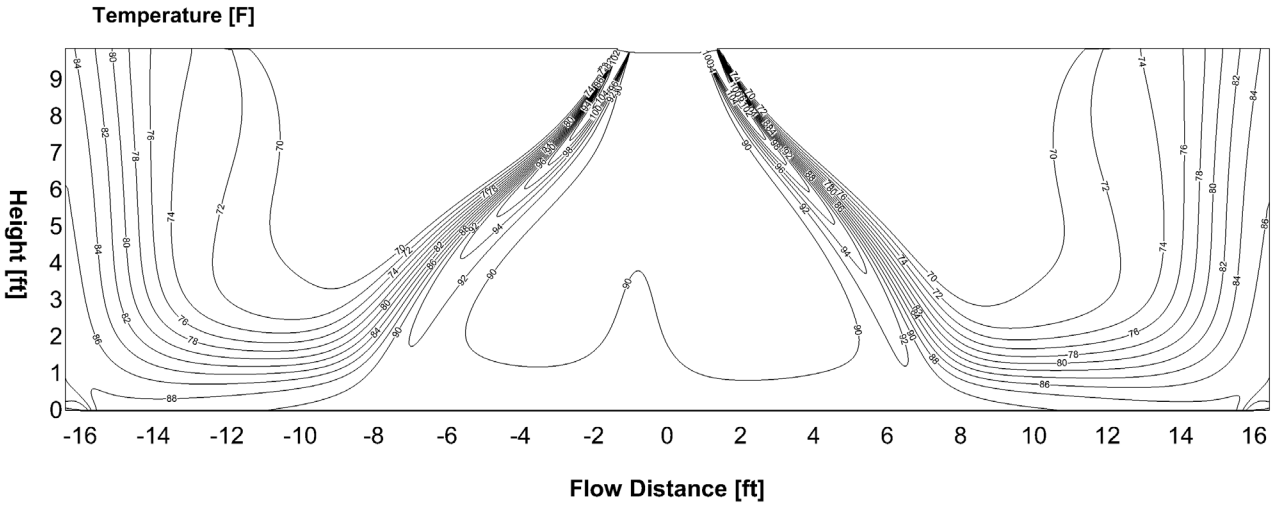

36k-Discharge Angle 50°

Cooling airflow velocity distributions

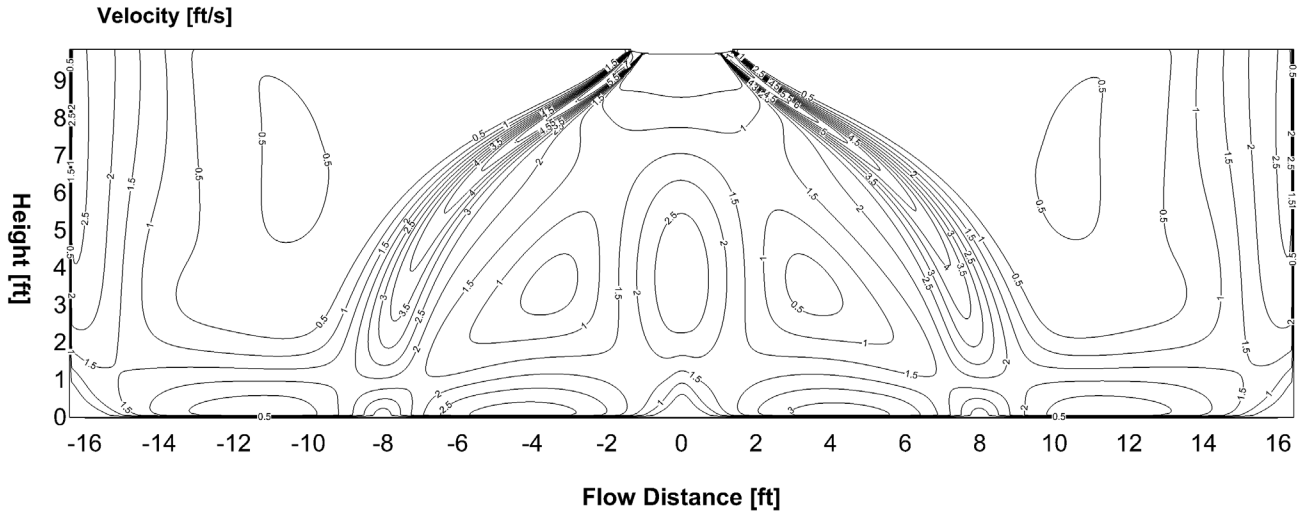

Cooling temperature distributions

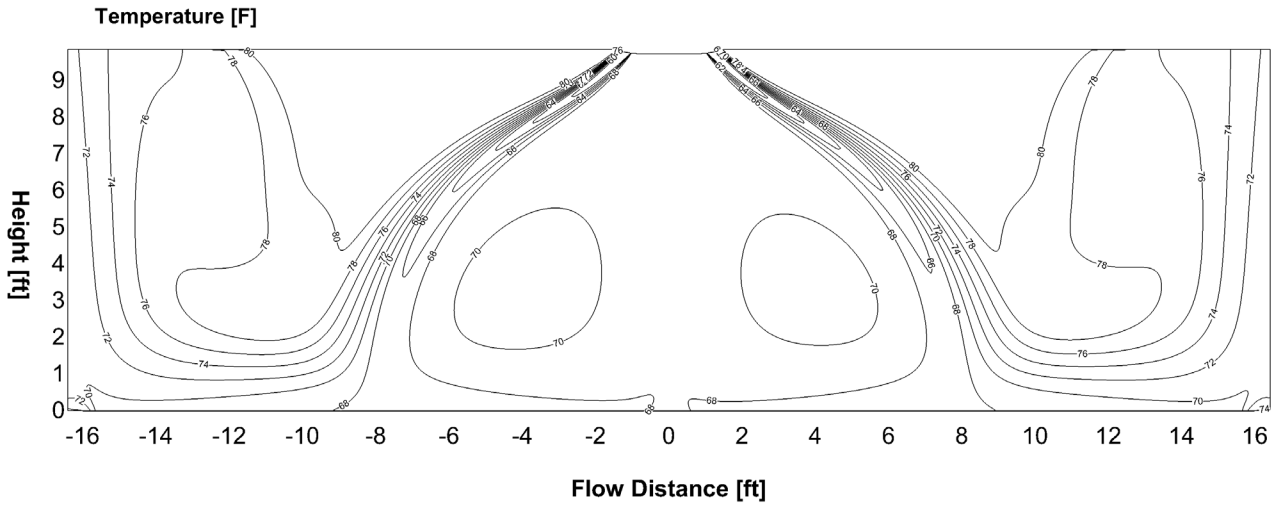

36k-Discharge Angle 65°

Heating airflow velocity distributions

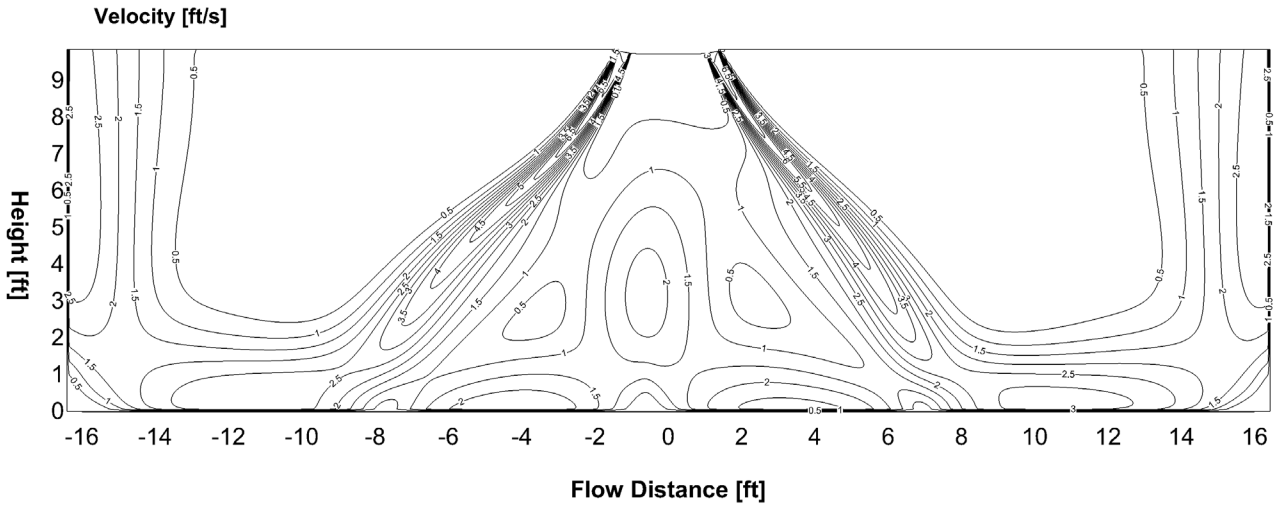

Heating temperature distributions

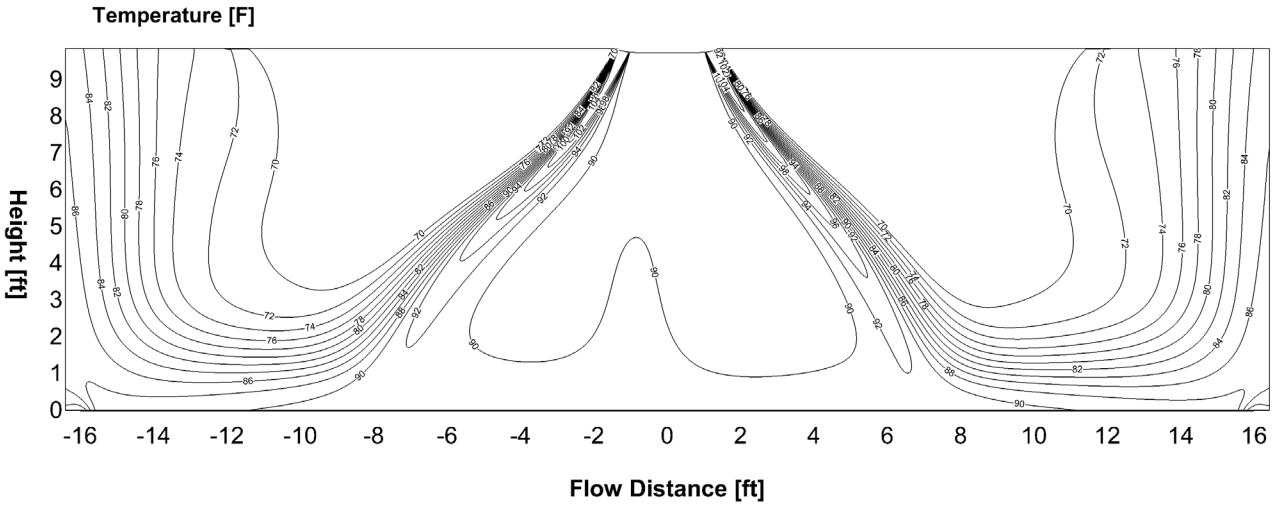

48k-Discharge Angle 50°

Cooling airflow velocity distributions

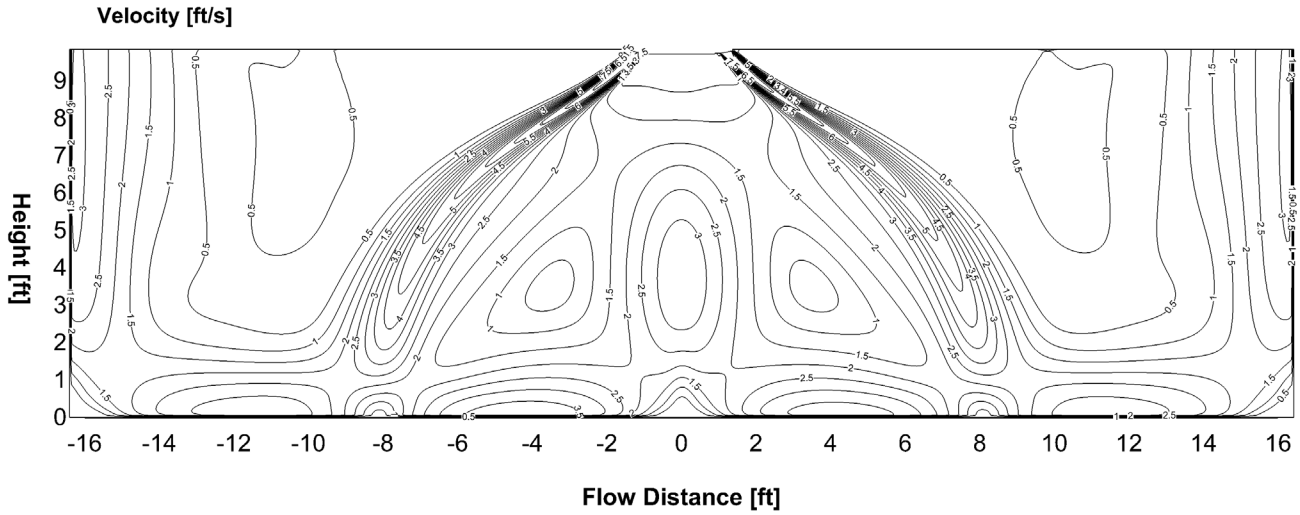

Cooling temperature distributions

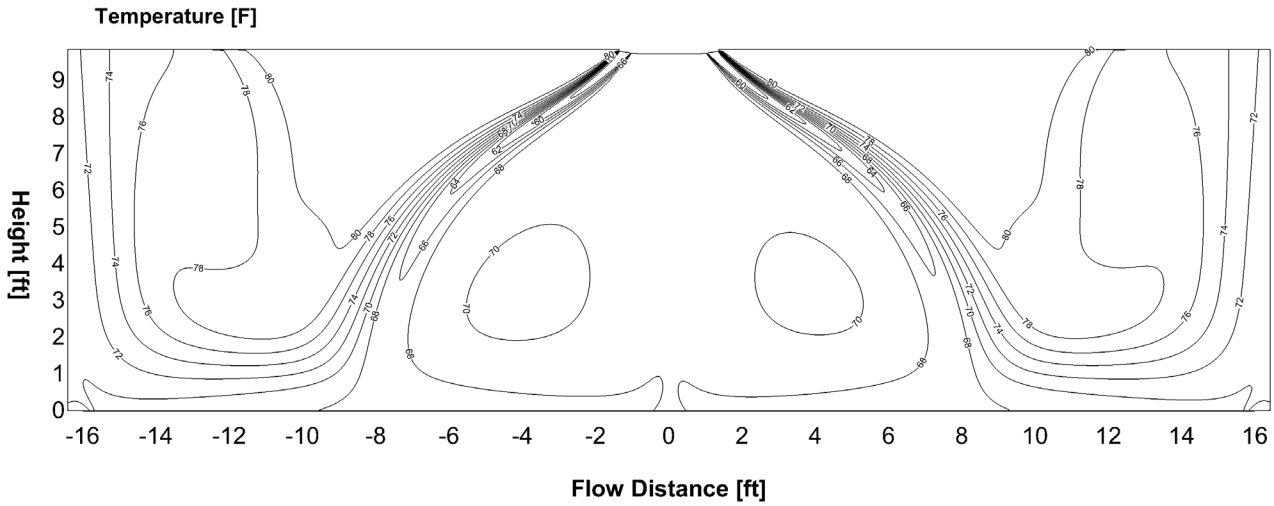

48k-Discharge Angle 65°

Heating airflow velocity distributions

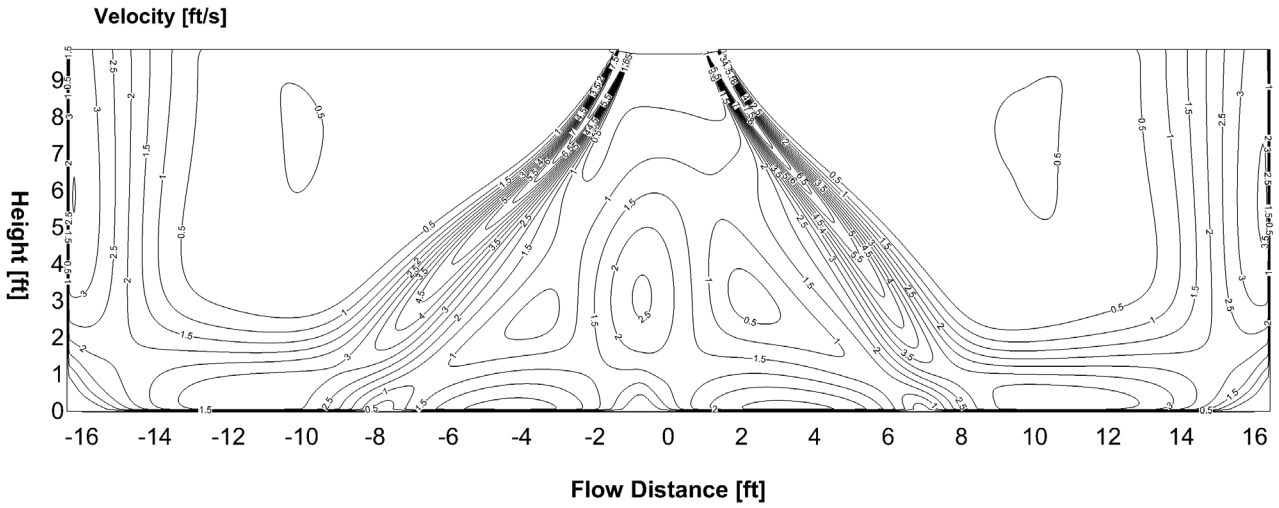

Heating temperature distributions

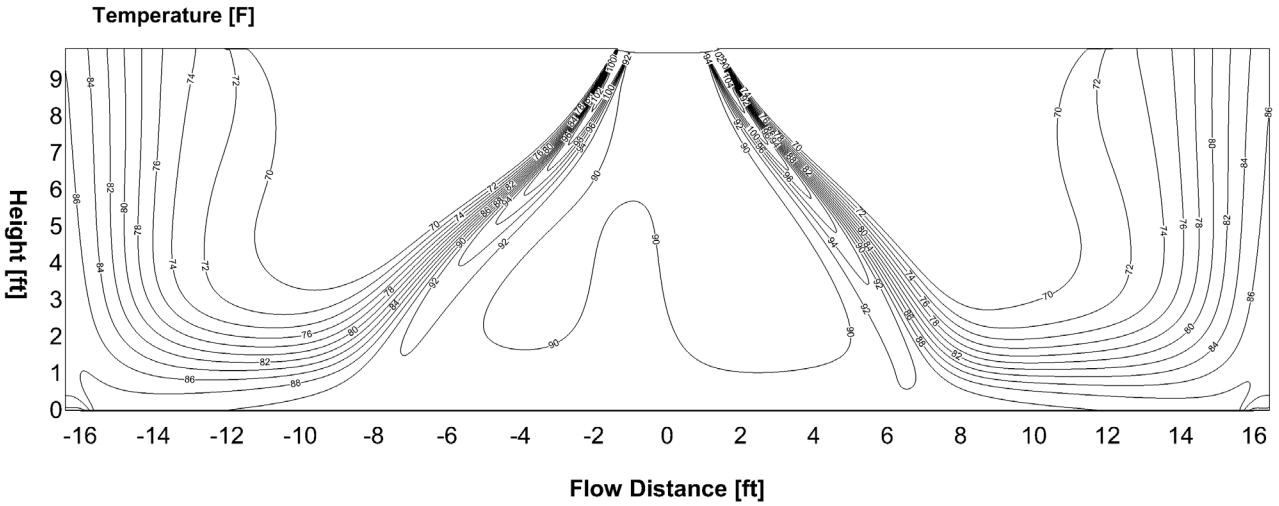

7. Sound Pressure Levels

7.1 Sound pressure level

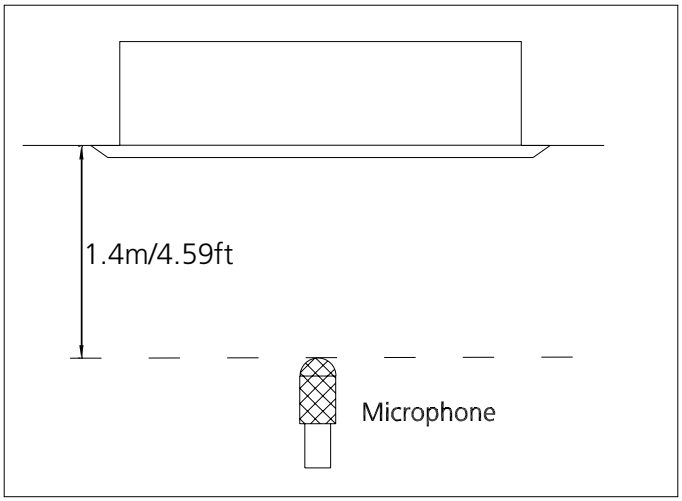

Notes:

-Sound measured at 1.4m/4.59ft away from the noisiest location of the unit.

-Data is valid at nominal operation condition

-Reference acoustic pressure OdB = 20μPa

-Sound level will vary depending on a range of factors such as the construction -(acoustic absorption coefficient) of particular room in which the equipment is installed.

-The operating conditions are assumed to be standard.

7.2 NC Curves

9k

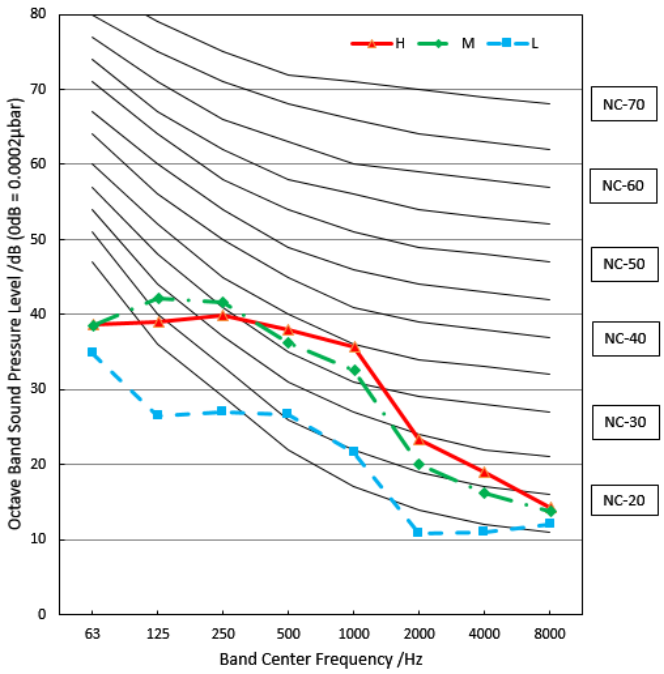

12k

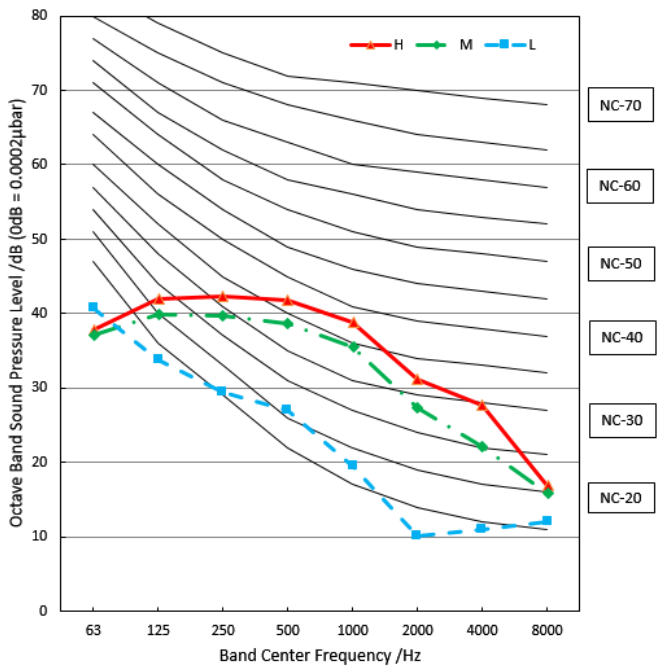

18k

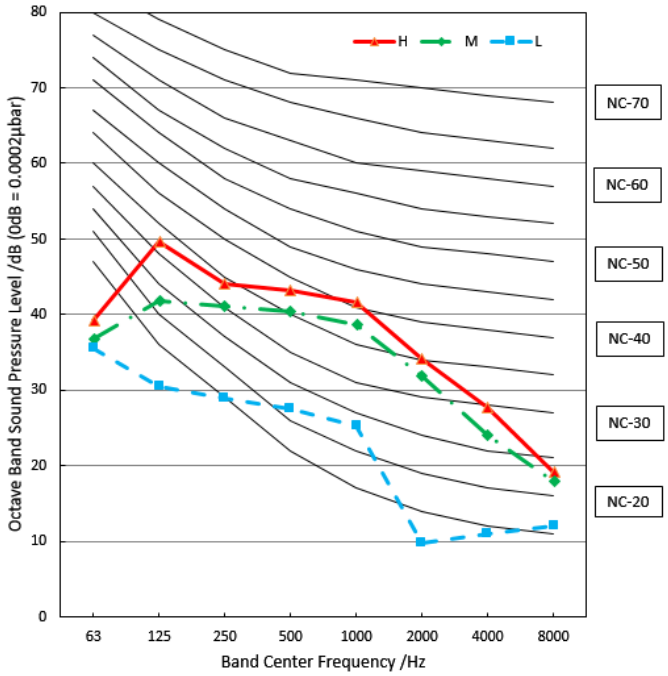

24k

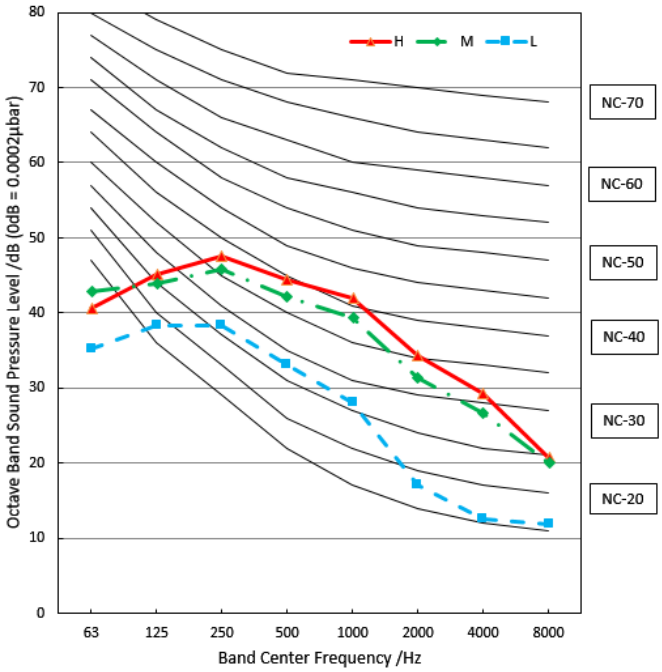

36k

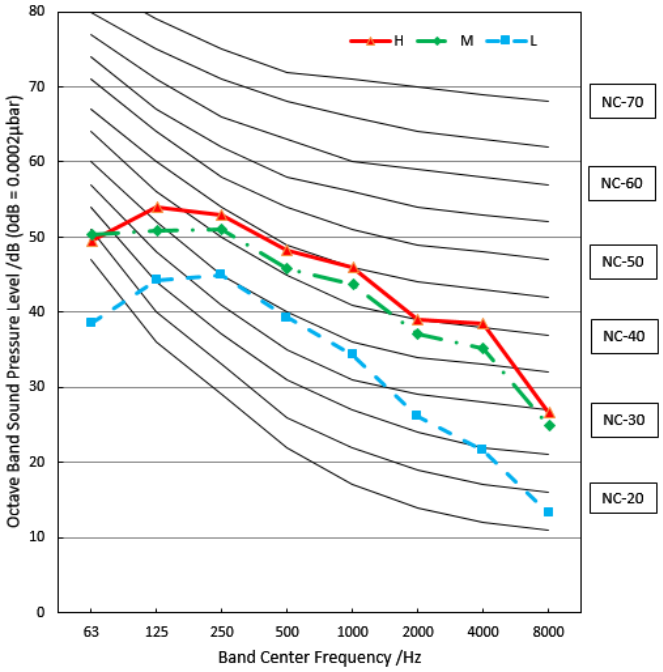

48k

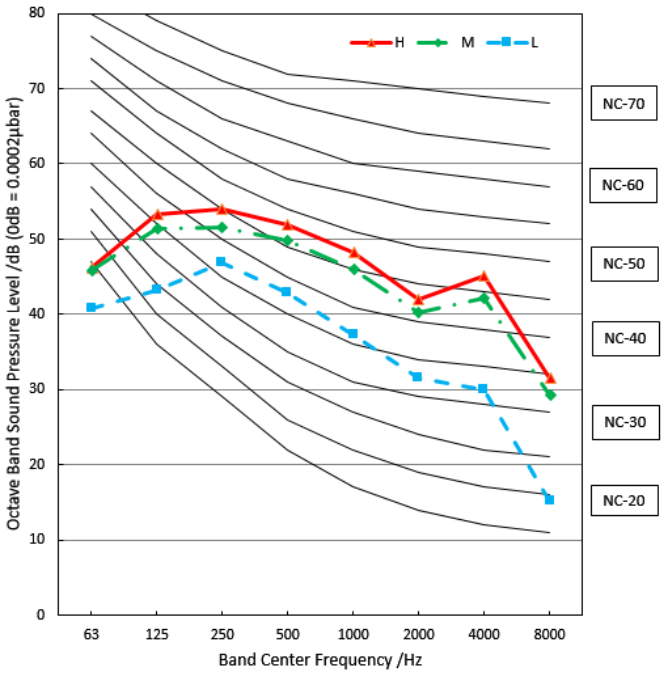

8. Refrigerant System Diagram

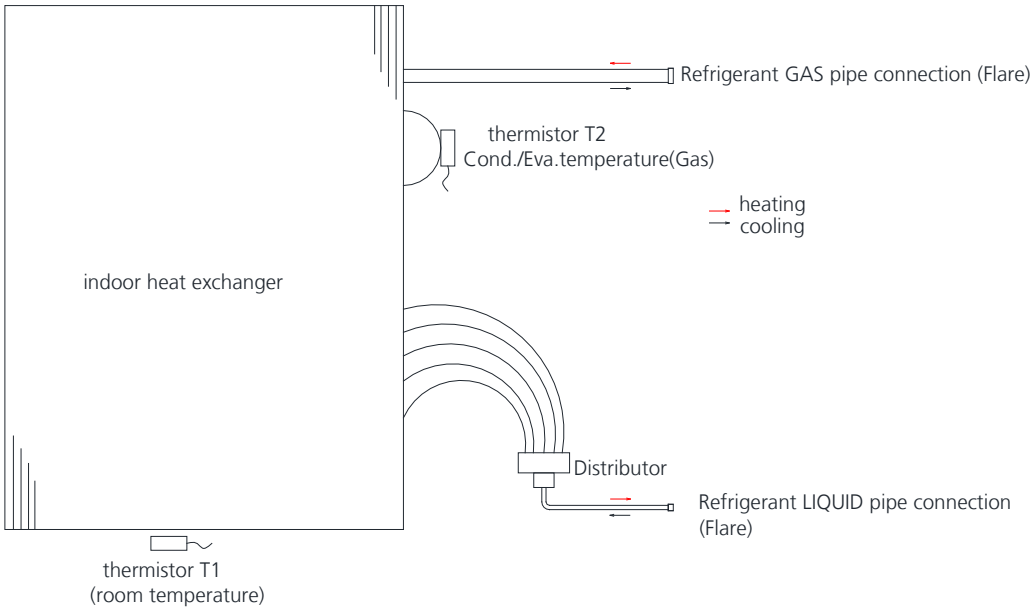

9. Electrical Characteristics

Indoor model		9k~48k
Power	Phase	1
	Frequency And Volt	208/230V,60Hz
Minimum Circuit Ampacity	A	3
Max Fuse	A	15

10. Electrical Wiring Diagrams

9k~18k

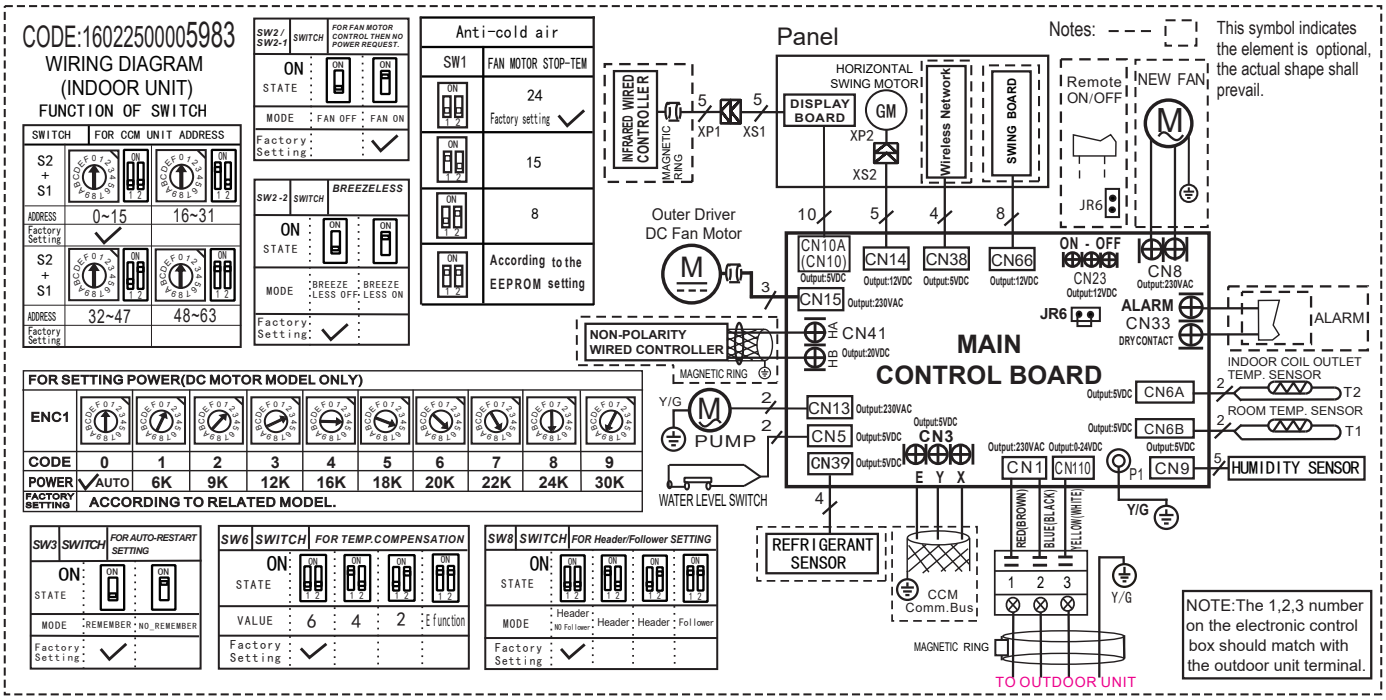

24k

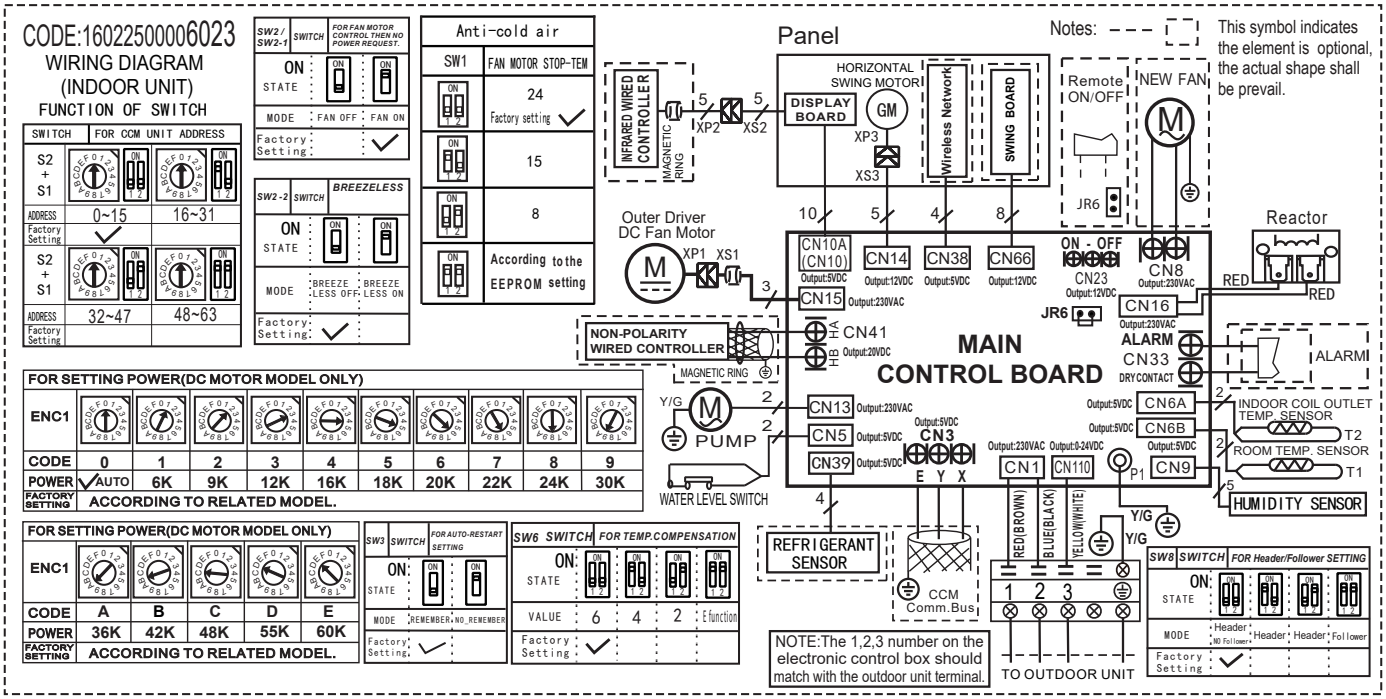
CODE:16022500006023
WIRING DIAGRAM
(INDOOR UNIT)
FUNCTION OF SWITCH
Anti-cold air
Panel
Notes:
This symbol indicates the element is optional, the actual shape shall be prevail.
INFRARED WIRED CONTROLLER
DISPLAY BOARD
HORIZONTAL SWING MOTOR
Wireless Network
SWING BOARD
Remote ON/OFF
NEW FAN
Reactor
Outer Driver DC Fan Motor
NON-POLARITY WIRED CONTROLLER
MAIN CONTROL BOARD
ALARM
INDOOR COIL OUTLET TEMP. SENSOR
ROOM TEMP. SENSOR
HUMIDITY SENSOR
PUMP
WATER LEVEL SWITCH
REFRIGERANT SENSOR
CCM Comm.Bus
TO OUTDOOR UNIT
NOTE:The 1,2,3 number on the electronic control box should match with the outdoor unit terminal.
FOR SETTING POWER(DC MOTOR MODEL ONLY)
ACCORDING TO RELATED MODEL.

36k~48k

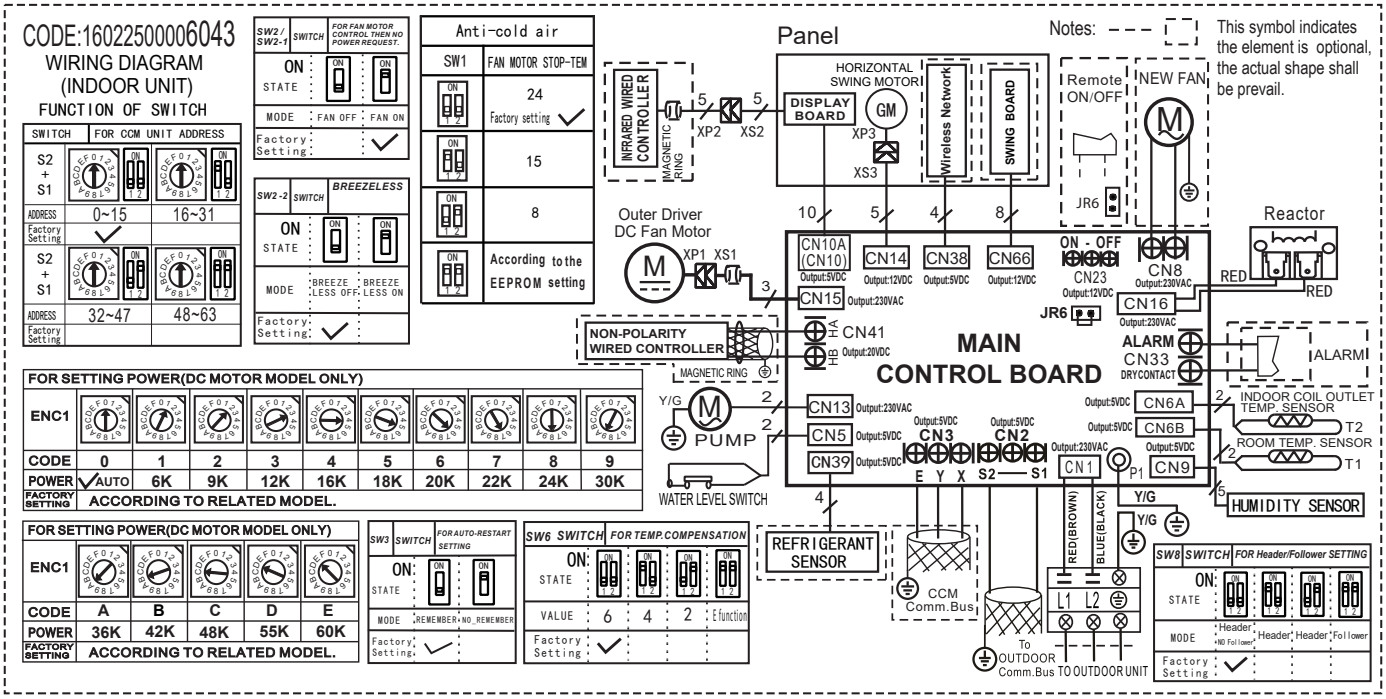
CODE:16022500006043
WIRING DIAGRAM
(INDOOR UNIT)
FUNCTION OF SWITCH
Anti-cold air
Panel
Notes:
This symbol indicates the element is optional, the actual shape shall be prevail.
INFRARED WIRED CONTROLLER
DISPLAY BOARD
HORIZONTAL SWING MOTOR
Wireless Network
SWING BOARD
Remote ON/OFF
NEW FAN
Reactor
Outer Driver DC Fan Motor
NON-POLARITY WIRED CONTROLLER
MAIN CONTROL BOARD
ALARM
INDOOR COIL OUTLET TEMP. SENSOR
ROOM TEMP. SENSOR
HUMIDITY SENSOR
PUMP
WATER LEVEL SWITCH
REFRIGERANT SENSOR
CCM Comm.Bus
To OUTDOOR Comm.Bus
TO OUTDOOR UNIT
FOR SETTING POWER(DC MOTOR MODEL ONLY)
ACCORDING TO RELATED MODEL.

10.1 Some connectors introduce:

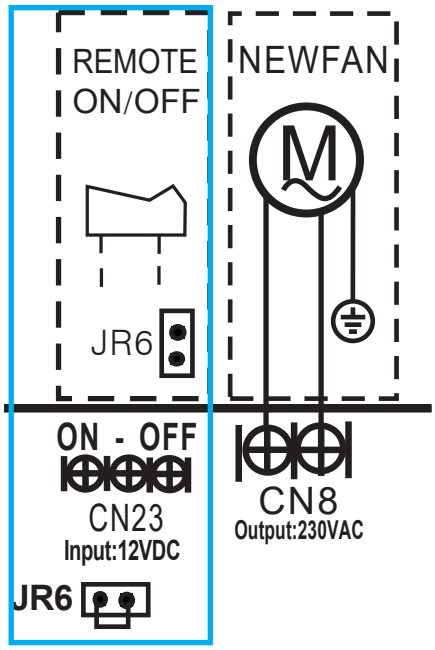

A For remote control (ON-OFF) terminal port CN23 and short connector of JR6

1. Remove the short connector of JR6 when you use ON-OFF function;
2. When remote switch off (OPEN) ;the unit would be off;
3. When remote switch on (CLOSE) ;the unit would be on;
4. When close/open the remote switch, the unit would be responded the demand within 2 seconds;
5. When the remote switch on. you can use remote controller/ wire controller to select the mode what you want ;when the remote switch off , the unit would not respond the demand from remote controller/wire controller.

when the remote switch off , but the remote controller / wire controller are on, CP code would be shown on the display board.

6.The voltage of the port is 12V DC , design Max.current is 5mA.

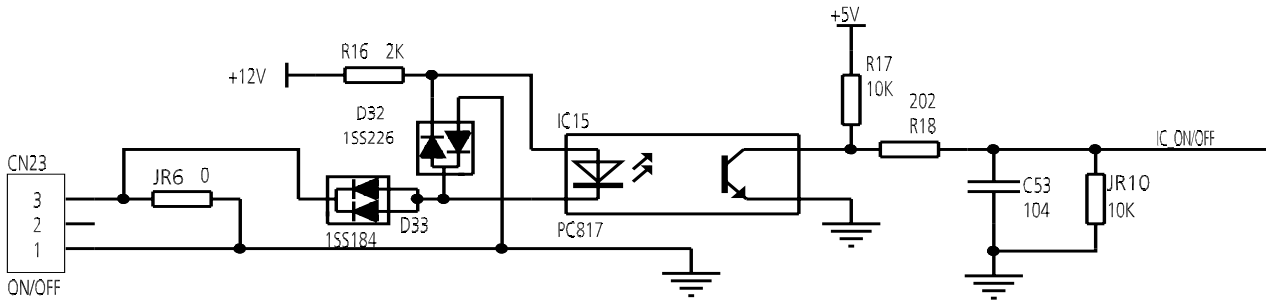

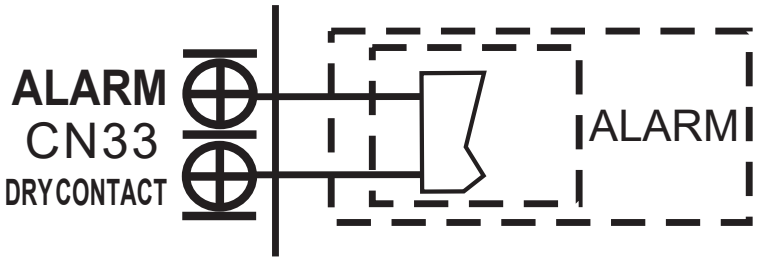

B For ALARM terminal port CN33

1. Provide the terminal port to connect ALARM ,but no voltage of the terminal port , the power from the ALARM system (not from the unit)
2. Although design voltage can support higher voltage ,but we strongly ask you connect the power less than 24V, current less than 0.5A
3. When the unit occurs the problem , the relay would be closed , then ALARM works

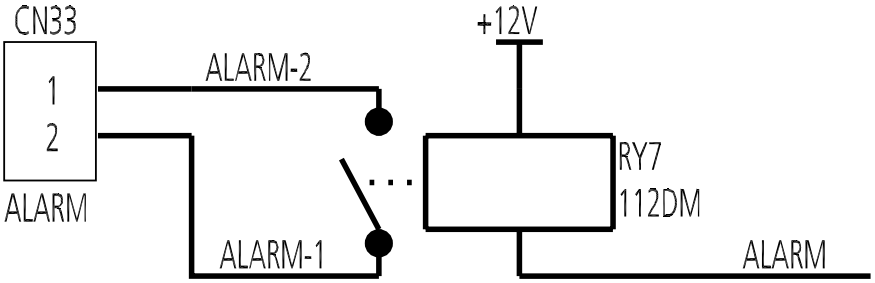

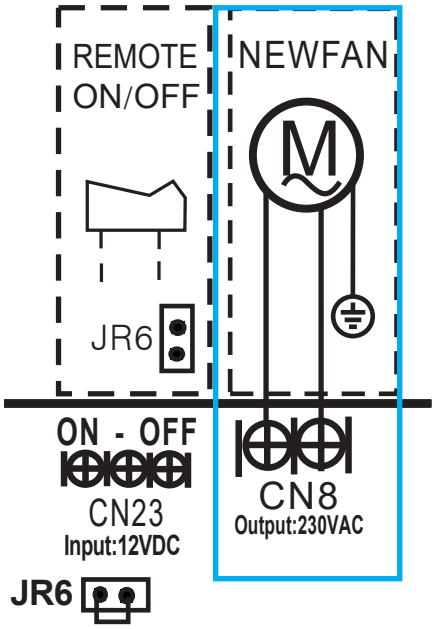

C. For new fresh motor terminal port CN8

1. Connect the fan motor to the port , no need care L/N of the motor ;
2. The output voltage is the power supply;
3. The fresh motor can not excess 200W or 1A , follow the smaller one ;
4. The new fresh motor will be worked when the indoor fan motor work ;when the indoor fan mo tor stops , the new fresh motor would be stopped ;
5. When the unit enter force cooling mode or capacity testing mode , the fresh motor isn't work .

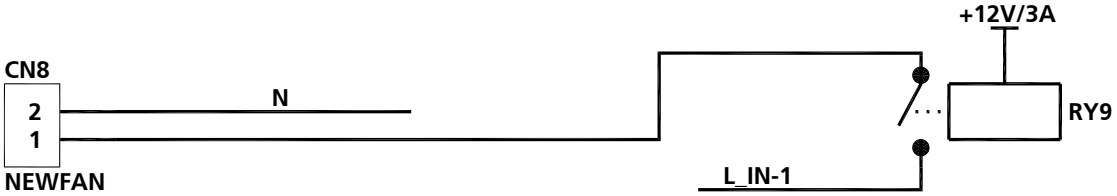

10.2 **Micro-Switch Introduce:**

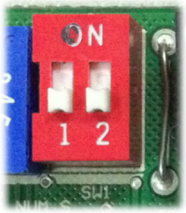

Anti-cold air	
SW1	FAN MOTOR STOP-TEM
ON 1 2	24 Factory setting ✓
ON 1 2	15
ON 1 2	8
ON 1 2	According to the EEPROM setting

A. Micro-switch SW1 is for selection of indoor fan stop temperature (TEL0) when it is in anti-cold wind action in heating mode.

Range: 24°C, 15°C, 8°C, According to EEROM setting (reserved for special customizing).

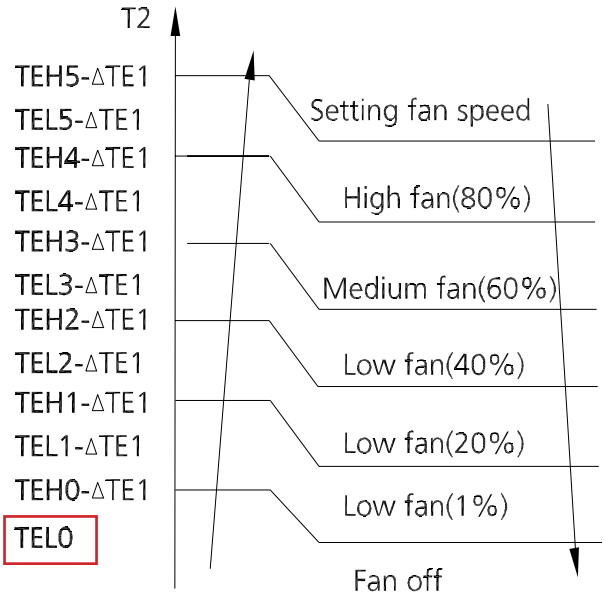

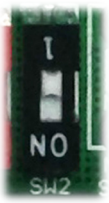

SW2 / SW2-1	SWITCH	FOR FAN MOTER CONTROL THEN NO POWER REQUEST.
ON STATE	ON	ON
MODE	FAN OFF	FAN ON
Factory Setting		✓

B.Micro-switch SW2/SW2-1 is for selection of indoor FAN ACTION if room temperature reaches the setponit and the compressor stops.

Range: OFF (anti-cold wind is available in heating mode), Keep running (No anti-cold wind function).

Note: SW2 dip switch is only reserved physical part but without mode modification function, if want to make change on the factory setting, should use remote controller or wire controller to reset(depend on model).

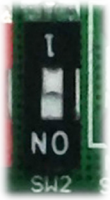

SW2-2	SWITCH	BREEZELESS	
ON STATE	ON	ON	
MODE	BREEZE LESS OFF	BREEZE LESS ON	
Factory Setting	✓		

C.Micro-switch SW2-2 is for selection of Breezeless function.
Range: OFF, ON.

SW3	SWITCH	FOR AUTO-RESTART SETTING	
ON: STATE	ON	ON	
MODE	REMEMBER	NO_REMEMBER	
Factory Setting	✓		

D.Micro-switch SW3 is for selection of auto-restart function.
Range: Active, inactive

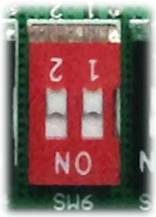

SW6	SWITCH	FOR TEMP.COMPENSATION		
ON: STATE	ON 1 2	ON 1 2	ON 1 2	ON 1 2
VALUE	6	4	2	E function
Factory Setting	✓			

E.Micro-switch SW6 is for selection of temperature compensation in heating mode. This helps to reduce the real temperature difference between ceiling and floor so that the unit could run properly. If the height of installation is lower, smaller value could be chosen.

Range: 6°C, 4°C, 2°C, E function (reserved for special customizing)

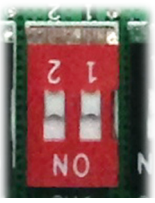

SW8	SWITCH	FOR Header/Follower SETTING		
ON: STATE	ON 1 2	ON 1 2	ON 1 2	ON 1 2
MODE	Header NO Follower	Header	Header	Follower
Factory Setting	✓			

F.Micro-switch SW8 is for setting main or slave.(For some models)

Range: No follower, header & follower.

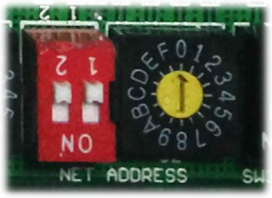

SWITCH	FOR CCM UNIT ADDRESS	
S2 + S1		
ADDRESS	0~15	16~31
Factory Setting	✓	
S2 + S1		
ADDRESS	32~47	48~63
Factory Setting		

G.Micro-switch S1 and dial-switch S2 are for address setting when you want to control this unit by a central controller.
Range: 00-63

FOR SETTING POWER(DC MOTOR MODEL ONLY)										
ENC1										
CODE	0	1	2	3	4	5	6	7	8	9
POWER	✓AUTO	6K	9K	12K	16K	18K	20K	22K	24K	30K
FACTORY SETTING	ACCORDING TO RELATED MODEL.									

FOR SETTING POWER(DC MOTOR MODEL ONLY)					
ENC1					
CODE	A	B	C	D	E
POWER	36K	42K	48K	55K	60K
FACTORY SETTING	ACCORDING TO RELATED MODEL.				

H. Dial-switch ENC1: The indoor PCB is universal designed for whole series units from 6K to 60K. This ENC1 setting will tell the main program what size the unit is.

Range: AUTO, 6K,9K,.....,60K

NOTE: AUTO means the indoor unit is equipped with different outdoor units, which can automatically identify the capacity of the outdoor uint, model, mono or multi zone and match the indoor unit parameters.

Usually there is glue on it because the switch position cannot be changed at random unless you want to use this PCB as a spare part to use in another unit. Then you have to select the right position to match the size of the unit.

Installation

Contents

1. Location Selection
2. Indoor Unit Installation
3. Drainage Pipe Installation
4. Refrigerant Pipe Installation
5. Engineering of Insulation
6. Engineering of Electrical Wiring

1. Location selection

1.1 Unit location selection can refer to installation manual.

1.2 DO NOT install the unit in the following locations:

- Areas with oil drilling or fracking.
- Coastal areas with high salt content in the air.
- Areas with caustic gases in the air, such as near hot springs.
- Areas that experience power fluctuations, such as factories
- Enclosed spaces, such as cabinets.
- Kitchens that use natural gas
- Areas with strong electromagnetic waves.
- Areas that store flammable materials or gas.
- Rooms with high humidity, such as bathrooms or laundry rooms.
- If possible, DO NOT install the unit where it is exposed to direct sunlight.

2. Indoor Unit Installation

2.1 Service space for indoor unit

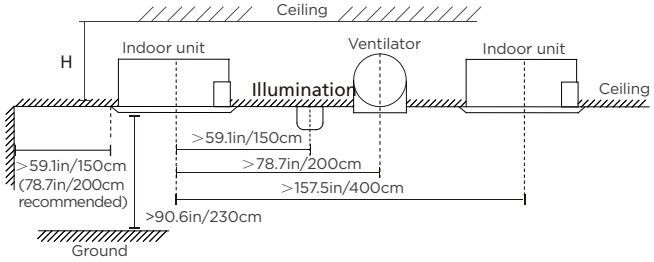

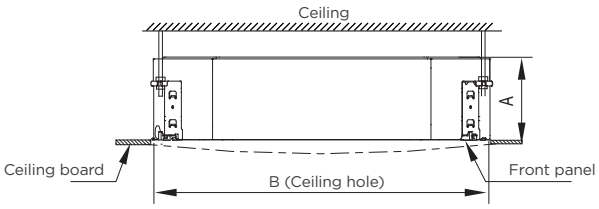

Capacity(Btu/h)	A(inch/mm)	H(inch/mm)	B(inch/mm)
9k/12k/18k	9.6/245	>11.4/290	23.6/600
24k	8.07/205	>9.06/230	35.4/900
36k	9.65/245	>10.7/271	
48k	11.3/287	>12.3/313	

2.2 Hang Indoor Unit

1. Use the included paper template to cut a rectangular hole in the ceiling, leaving at least 39in(1m)on all sides. The cut hole size should be 16in(4cm) larger than the body size.

Be sure to mark the areas where ceiling hook holes will be drilled.

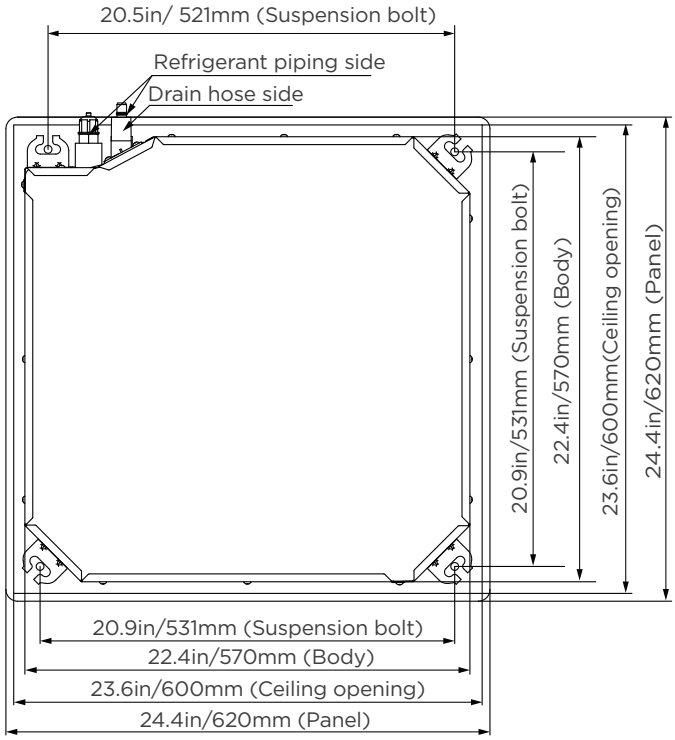

Model: 9K/12K/18K

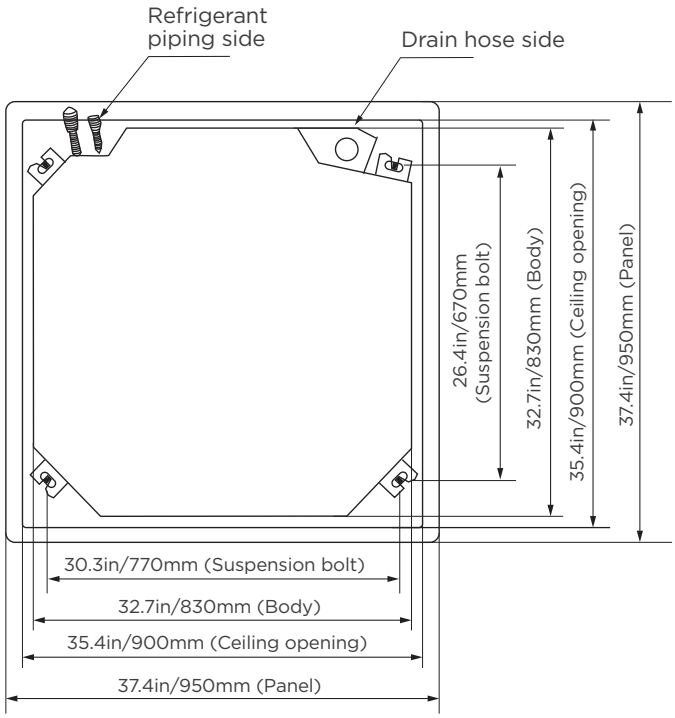

Model: 24K/36K/48K

⚠CAUTION:

The unit body should align perfectly with the hole. Ensure that the unit and the hole are the same size before moving on.

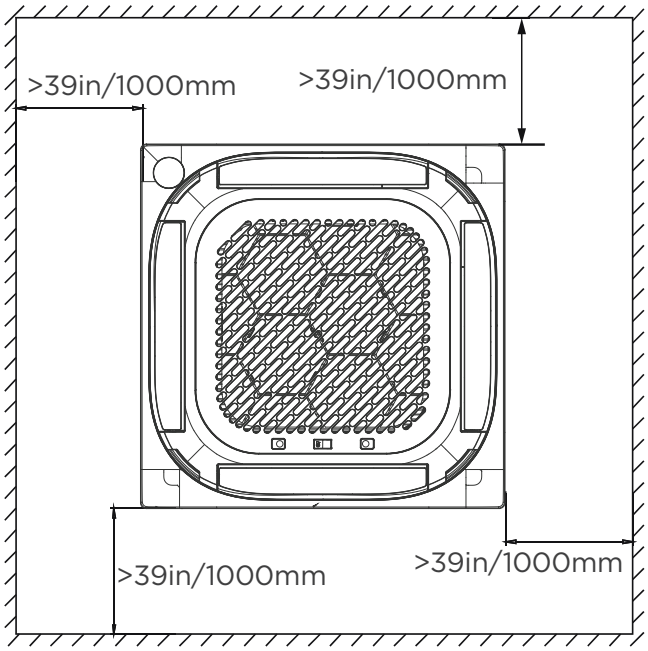

2. Drill 4 holes 4.7in-6.1in (12cm-15.5cm) deep at the ceiling hook positions in the internal ceiling. Be sure to hold the drill at a 90° angle to the ceiling.
3. Using a hammer, insert the ceiling hooks into the pre-drilled holes. Secure the bolt using the included washers and nuts.
4. Install the four suspension bolts

5. Mount the indoor unit. You will need two people to lift and secure it. Insert suspension bolts into the unit's hanging holes. Fasten them using the included washers and nuts

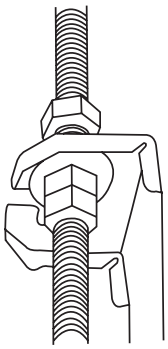

NOTE:The bottom of the unit should be 0.4-0.98in (10-25mm) higher than the ceiling board. Generally, L (indicated in the following figure) should be half the length of the suspension bolt or long enough to prevent the nuts from coming of.

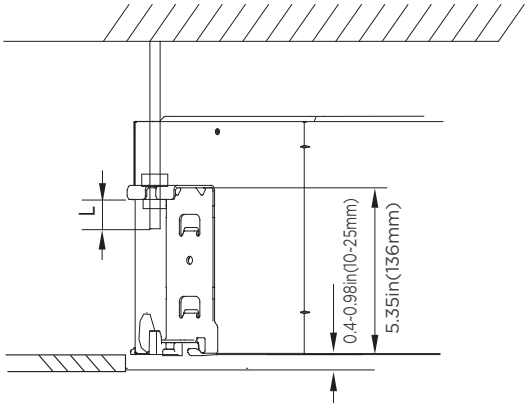

⚠CAUTION:

Ensure that the unit is completely level.

The unit is equipped with a built-in drain pump and float switch. If the unit is tilted against the direction of condensate flows (the drainpipe side is raised), the float switch may malfunction and cause water to leak.

NOTE: Ensure that the indoor unit is level.

The unit is equipped with a built-in drain pump and float switch. If the unit is tilted against the direction of condensate flows (the drainpipe side is raised), the float switch may malfunction and cause water to leak.

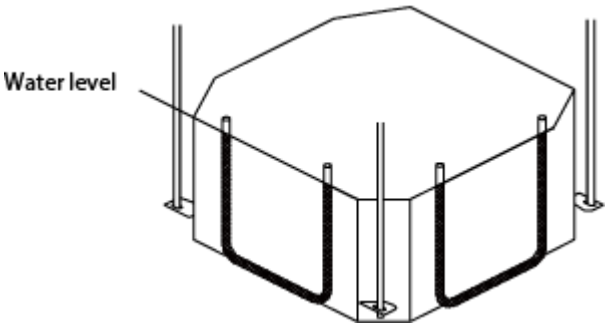

NOTE FOR NEW HOME INSTALLATION

When installing the unit in a new home, the ceiling hooks can be embedded in advance. Make sure that the hooks do not come loose due to concrete shrinkage. After installing the indoor unit, fasten the installation paper template onto the unit with bolts to determine in advance the dimension and position of the opening on the ceiling. Follow the instructions above for the remainder of the installation.

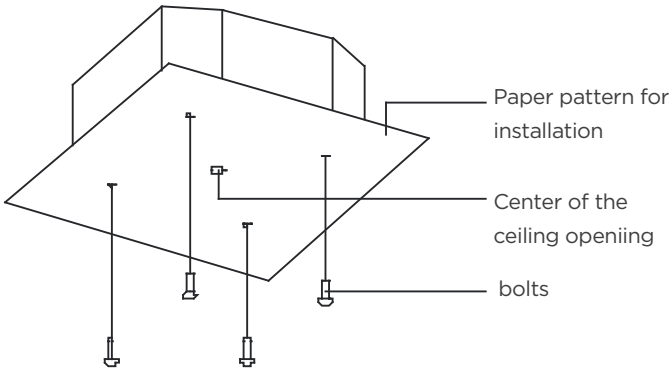

2.3 Panel Installation

2.3.1 Remove the front grille

1. Push both of the tabs towards the middle simultaneously to unlock the hook on the grille.

2. Hold the grille at a 45° angle, lift it up slightly and detach it from the main body

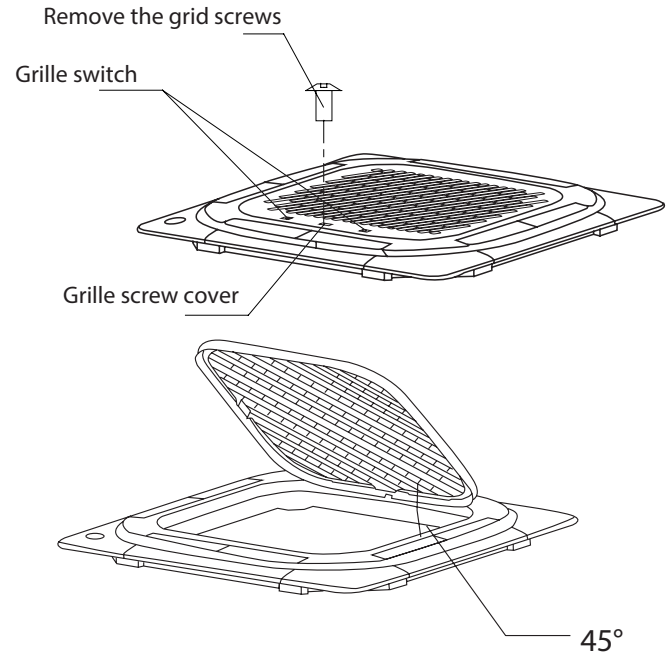

2.3.2 The panel hook is pre-hung to the indoor unit flow guide ring, as shown.

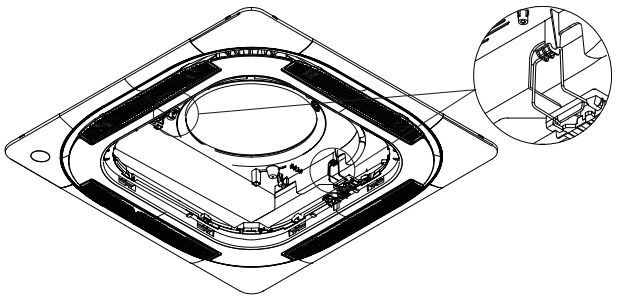

2.3.3 Install the panel with four screws(M5), as shown.

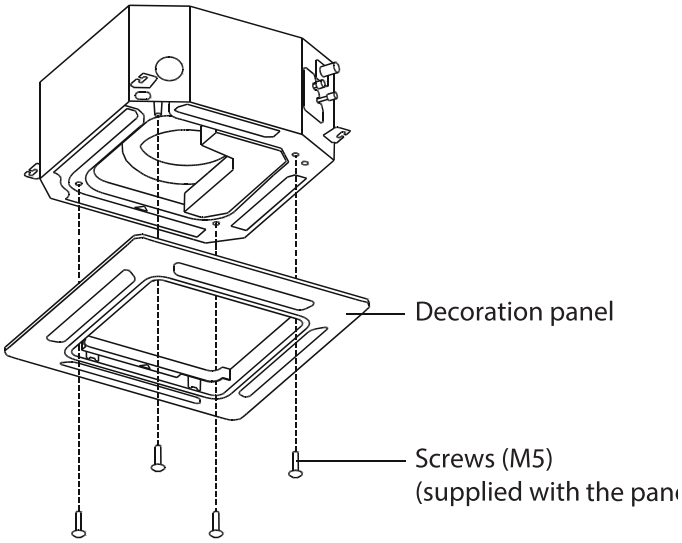

NOTE: If the height of the indoor unit needs to be adjusted, you can do so through the openings at the panel's four corners. Make sure that the internal wiring and drainpipe are not afected by this adjustment.

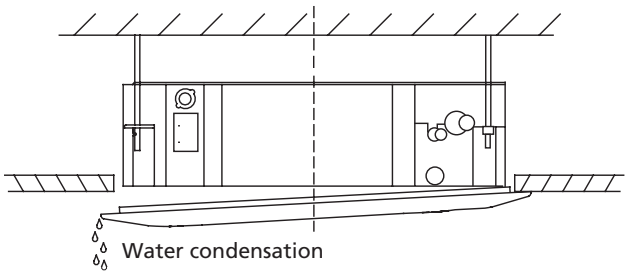

⚠CAUTION:

Failure to tighten screws can cause water leakage.

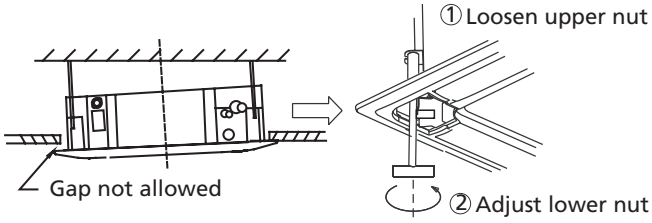

⚠CAUTION:

If the unit is not hung correctly and a gap exists, the unit's height must be adjusted to ensure proper function. The unit's height can be adjusted by loosening the upper nut, and adjusting the lower nut.

Hang the intake grille on the panel, and then connect the lead connectors of the louver motor and the control box on the panel to the corresponding connectors of the main body.

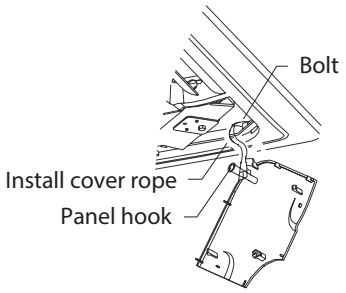

Re-installed into the style grid.

Reinstall the installation cover.

Fix the installation cover plate rope to the pillar of the installation cover plate, and gently press the installation cover plate into the panel.

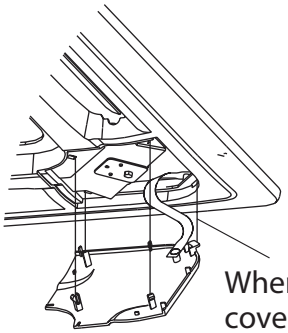

When installing the cover, slide the four slide fasteners into the corresponding slots on the panel.

NOTE: After installation, the butt plugs of display, swing, water pump and other wire bodies must be placed in the electric control box.

Connection diagram

For panels without vane control module, the display board CN1 is connected to the main control board CN10, the motor cable is connected to the main control board CN14.

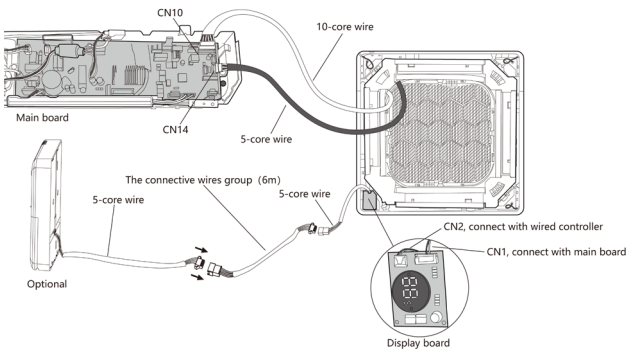

For panels with vane control module, the display board CN1 is connected to the main control board CN10, the vane control motor cable is connected to the main control board CN66.

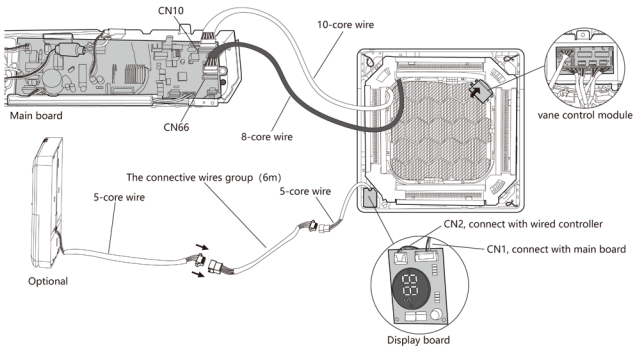

The display board CN2 is connected to a connecting cable. Then connect the other side of the connecting cable to the optional wired controller.

3. Drainage Pipe Installation

Install the drainpipe as illustrated in the following Figure.

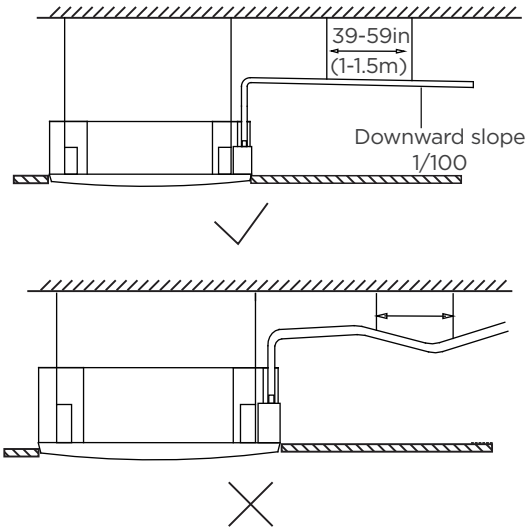

NOTE ON DRAINPIPE INSTALLATION

- When using an extended drainpipe, tighten the indoor connection with an additional protection tube to prevent it from pulling loose.
- The drainpipe should slope downward at a gradient of at least 1/100 to prevent water from flowing back into the air conditioner.
- To prevent the pipe from sagging, space hanging wires every 39-59in (1-1.5m).
- If the outlet of the drainpipe is higher than the body's pump joint, provide a lift pipe for the exhaust outlet of the indoor unit. The lift pipe must be installed no higher than 29.5in (75cm) from the ceiling board and the distance between the unit and the lift pipe must be less than 11.8in (30cm).
- Incorrect installation could cause water to flow back into the unit and flood.
- To prevent air bubbles, keep the drain hose level or slightly tiled up (3in/ <75mm).

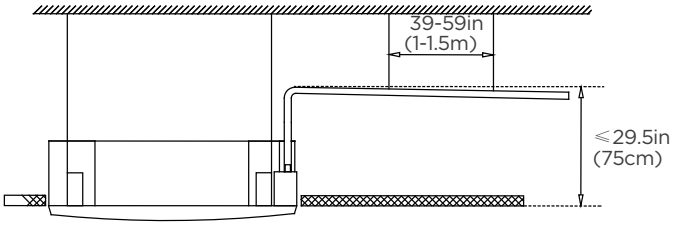

NOTE:When connecting multiple drainpipes,install the pipes as illustrated in the following Figure.

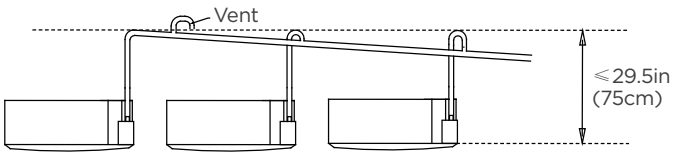

Pass the drain hose through the wall hole.

Make sure the water drains to a safe location where it will not cause water damage or a slipping hazard.

NOTE: The drainpipe outlet should be at least 1.9in(5cm) above the ground. If it touches the ground, the unit may become blocked and malfunction. If you discharge the water directly into a sewer, make sure that the drain has a U or S pipe to catch odors that might otherwise come back into the house.

How to install the conduit installation plate (if supplied)

1. Fix the sheath connector (not supply) on the wire hole of the conduit installation plate.

2. Fix the the conduit installation plate on the chassis of the unit.

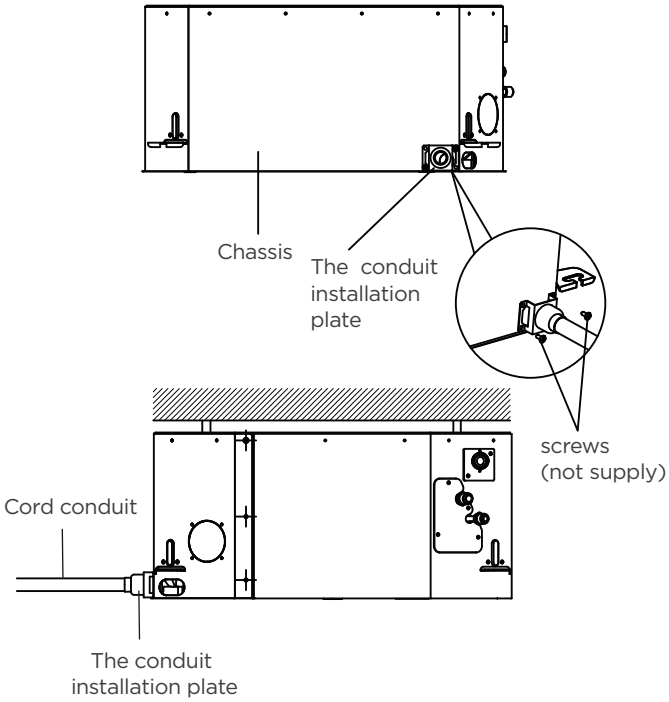

4. Refrigerant Pipe Installation

4.1 Recommended copper pipe thickness

Pipe diameter (inch(mm))	Thickness(inch/mm)
Ø1/4 (Ø6.35)	0.024/0.6
Ø3/8 (Ø9.52)	0.028/0.7
Ø1/2 (Ø12.7)	0.03/0.75
Ø5/8 (Ø15.9)	0.03/0.75
Ø3/4 (Ø19)	0.031/0.8
Ø7/8 (Ø22)	0.039/1

4.2 Maximum length and drop height

Ensure that the length of the refrigerant pipe, the number of bends, and the drop height between the indoor and outdoor units meets the requirements shown in the following table.

Capacity (Btu/h)	Max. Length (ft/m)	Max. Elevation (ft/m)
9k/12k	82/25	49.2/15
18k	98.4/30	65.6/20
24k	164/50	82/25
36k/48k/60k	246/75	98.4/30

Caution:

1. The capacity test is based on the standard length and the maximum permissive length is based on the system reliability.

2. Oil traps

-If oil flows back into the outdoor unit's compressor, this might cause liquid compression or deterioration of oil return. Oil traps in the rising gas piping can prevent this.

-An oil trap should be installed every 20ft(6m) of vertical suction line riser (<36k Btu/h unit).

-An oil trap should be installed every 32.8ft(10m) of vertical suction line riser (≥36k Btu/h unit).

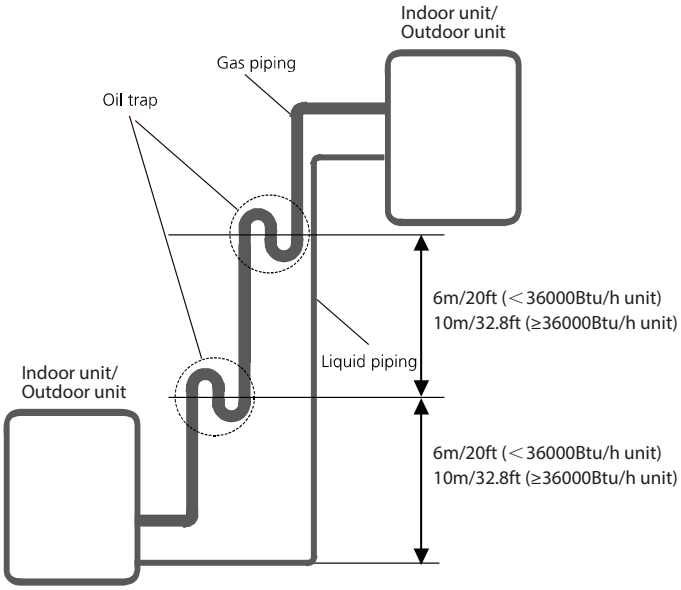

4.3 The procedure of connecting pipes

1. Choose the pipe size according to the specification table.

2. Confirm the cross way of the pipes.

3. Measure the necessary pipe length.

4. Cut the selected pipe with pipe cutter

- Make the section flat and smooth.

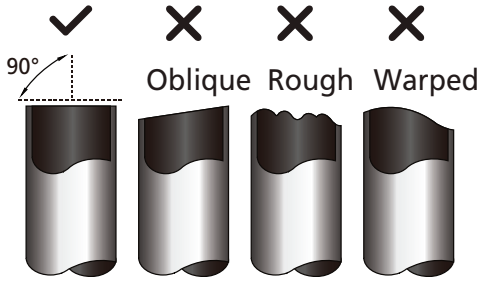

5. Insulate the copper pipe

- Before test operation, the joint parts should not be heat insulated.

6. Flare the pipe

- Insert a flare nut into the pipe before flaring the pipe
- According to the following table to flare the pipe.

Pipe diameter (inch(mm))	Flare dimension A (inch/mm)		Flare shape
	Min	Max	
Ø1/4 (Ø6.35)	0.33/8.4	0.34/8.7	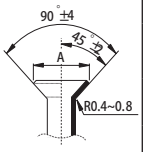
Ø3/8 (Ø9.52)	0.52/13.2	0.53/13.5	
Ø1/2 (Ø12.7)	0.64/16.2	0.65/16.5	
Ø5/8 (Ø15.9)	0.76/19.2	0.78/19.7	
Ø3/4 (Ø19)	0.91/23.2	0.93/23.7	
Ø7/8 (Ø22)	1.04/26.4	1.06/26.9	

- After flared the pipe, the opening part must be seal by end cover or adhesive tape to avoid duct or exogenous impurity come into the pipe.

7. Drill holes if the pipes need to pass the wall.

8. According to the field condition to bend the pipes so that it can pass the wall smoothly.

9. Bind and wrap the wire together with the insulated pipe if necessary.

10. Set the wall conduit.

11. Set the supporter for the pipe.

12. Locate the pipe and fix it by supporter.

- For horizontal refrigerant pipe, the distance between supporters should not be exceed 1m.
- For vertical refrigerant pipe, the distance between supporters should not be exceed 1.5m.

13. Connect the pipe to indoor unit and outdoor unit by using two spanners.

- Be sure to use two spanners and proper torque to fasten the nut, too large torque will damage the bellmouthing, and too small torque may cause leakage. Refer the following table for different pipe connection.

Pipe diameter (inch(mm))	Torque N.m(lb.ft)	Sketch map
Ø1/4 (Ø6.35)	18~20 (13.3~14.8)	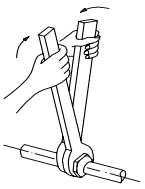
Ø3/8 (Ø9.52)	32~39 (23.6~28.8)	
Ø1/2 (Ø12.7)	49~59 (36.1~43.5)	
Ø5/8 (Ø15.9)	57~71 (42~52.4)	
Ø3/4 (Ø19)	67~101 (49.4~74.5)	
Ø7/8 (Ø22)	85-110 (62.7-81.1)	

NOTE: MINIMUM BEND RADIUS

Carefully bend the tubing in the middle according to the diagram below.

DO NOT bend the tubing more than 90°or more than 3 times.

Use appropriate tool

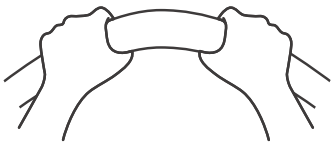

min-radius 10cm(3.9")

5 . Engineering of Insulation

5.1 Insulation of refrigerant pipe

1. Operational procedure of refrigerant pipe insulation

Cut the suitable pipe → insulation (except joint section) → flare the pipe → piping layout and connection→ vacuum drying → insulate the joint parts

2. Purpose of refrigerant pipe insulation

- During operation, temperature of gas pipe and liquid pipe shall be over-heating or over-cooling extremely. Therefore, it is necessary to carry out insulation; otherwise it shall debase the performance of unit and burn compressor.
- Gas pipe temperature is very low during cooling. If insulation is not enough, it shall form dew and cause leakage.
- Temperature of gas pipe is very high (generally 50-100°C/122-212°F) during heating. Insulation work must be carried out to prevent hurt by carelessness touching.

3. Insulation material selection for refrigerant pipe

- The burning performance should over 120°C/248°F
- According to the local law to choose insulation materials
- Recommended insulation casing thickness

Humidity<80%RH	Humidity ≥80%RH
10mm/0.39in	15mm/0.59in

4. Installation highlights of insulation construction

- Gas pipe and liquid pipe shall be insulated separately, if the gas pipe and liquid pipe were insulated together; it will decrease the performance of air conditioner.

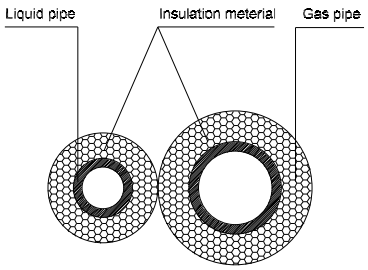

- The insulation material at the joint pipe shall be 5~10cm/1.97~3.97in longer than the gap of the insulation material.
- The insulation material at the joint pipe shall be inserted into the gap of the insulation material.
- The insulation material at the joint pipe shall be banded to the gap pipe and liquid pipe tightly.
- The linking part should be use glue to paste together
- Be sure not bind the insulation material over-tight, it may extrude out the air in the material to cause bad insulation and cause easy aging of the material.

5.2 Insulation of drainage pipe

1. Operational procedure of refrigerant pipe insulation

Select the suitable pipe → insulation (except joint section) → piping layout and connection→ drainage test→ insulate the joint parts

2. Purpose of drainage pipe insulation

The temperature of condensate drainage water is very low. If insulation is not enough, it shall form dew and cause leakage to damage the house decoration.

3. Insulation material selection for drainage pipe

- The insulation material should be flame retardant material, the flame retardancy of the material should be selected according to the local law.
- Thickness of insulation layer is usually above 10mm/0.39in.
- Use specific glue to paste the seam of insulation material, and then bind with adhesive tape. The width of tape shall not be less than 5cm/1.97in. Make sure it is firm and avoid dew.

4. Installation and highlights of insulation construction

- The single pipe should be insulated before connecting to another pipe, the joint part should be insulated after the drainage test.
- There should be no insulation gap between the insulation material.

6. Engineering of Electrical Wring

1. Highlights of electrical wiring installation

- All field wiring construction should be finished by qualified electrician.
- Air conditioning equipment should be grounded according to the local electrical regulations.
- Current leakage protection switch should be installed.
- Do not connect the power wire to the terminal of signal wire.
- When power wire is parallel with signal wire, put wires to their own wire tube and remain at least 300mm/11.8in gap.
- According to table in indoor part named “the specification of the power” to choose the wiring, make sure the selected wiring not small than the date showing in the table.
- Select different colors for different wire according to relevant regulations.
- Do not use metal wire tube at the place with acid or alkali corrosion, adopt plastic wire tube to replace it.
- There must be not wire connect joint in the wire tube If joint is a must, set a connection box at the place.
- The wiring with different voltage should not be in one wire tube.
- Ensure that the color of the wires of outdoor and the terminal No. are same as those of indoor unit respectively.

Table: Minimum Cross-Sectional Area able of Power and Signal Cables

Rated Current of Appliance (A)	AWG
≤ 6	18
6 - 10	16
10 - 16	14
16 - 25	12
25 - 32	10

Product Features

Contents

1. Display Function 2

2 Safety Features 3

3. Basic Functions 4

3.1 Table 4

3.2 Abbreviation 5

3.3 Fan Mode 5

3.4 Cooling Mode 5

3.5 Heating Mode(Heat Pump Units) 6

3.6 Auto-mode 6

3.7 Drying Mode 7

3.8 Forced Operation Function 7

3.9 Timer Function 7

3.10 Sleep Function 7

3.11 Auto-Restart Function 7

3.12 8°C Heating(Heat pump units) 7

3.13 Follow me 8

4. Optional Functions 9

1. Display Function

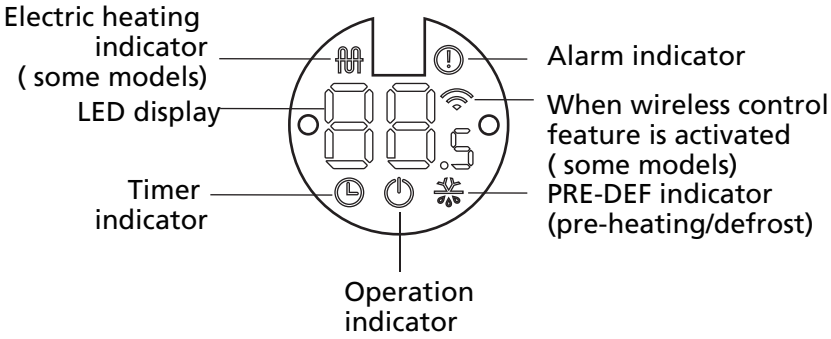

2. Safety Features

Compressor three-minute delay at restart

Compressor functions are delayed for up to ten seconds upon the first startup of the unit, and are delayed for up to three minutes upon subsequent unit restarts.

Automatic shutoff based on discharge temperature

If the compressor discharge temperature exceeds a certain level for nine seconds, the compressor ceases operation.

Inverter module protection

The inverter module has an automatic shutoff mechanism based on the unit's current, voltage, and temperature. If automatic shutoff is initiated, the corresponding error code is displayed on the indoor unit and the unit ceases operation.

Indoor fan delayed operation

- When the unit starts, the louver is automatically activated and the indoor fan will operate after a period of setting time or the louver is in place.
- If the unit is in heating mode, the indoor fan is regulated by the anti-cold wind function.

Compressor preheating

Preheating is automatically activated when T4 sensor is lower than setting temperature.

Sensor redundancy and automatic shutoff

- If one temperature sensor malfunctions, the air conditioner continues operation and displays the corresponding error code, allowing for emergency use.
- When more than one temperature sensor is malfunctioning, the air conditioner ceases operation.

3. Basic Functions

3.1 Table

Functions		Auto mode		
Cases		Case 1	Case 2	Case 3
Models	9k~48k		✓	

Note: The detailed description of case 1 or case 2 is shown in the following function sections(from 3.4 to 3.6).

3.2 Abbreviation

Unit element abbreviations

Abbreviation	Element
T1	Indoor room temperature
T2	Coil temperature of evaporator
T3	Coil temperature of condenser
T4	Outdoor ambient temperature
TP	Compressor discharge temperature
Tsc	Adjusted setting temperature
CDIFTEMP	Cooling shutdown temperature
HDIFTEMP2	Heating shutdown temperature

In this manual, such as CDIFTEMP, HDIFTEMP2...etc., they are well-setting parameter of EEPROM.

3.3 Fan Mode

When fan mode is activated:

- The outdoor fan and compressor are stopped.
- Temperature control is disabled and no temperature setting is displayed.
- The indoor fan speed can be set to 1%~100% and auto.
- The louver operations are identical to those in cooling mode.
- Auto fan: In fan-only mode, AC operates the same as auto fan in cooling mode with the temperature set at 24°C(75°F).

3.4 Cooling Mode

3.4.1 Indoor Fan Control

1) In cooling mode, the indoor fan operates continuously. The fan speed can be set to 1%-100%, or low, medium, high and auto.

2) Auto fan action in cooling mode:

- Descent curve
  - When T1-Tsc is lower than to 3.5°C/6°F, fan speed reduces to 80%;
  - When T1-Tsc is lower than to 1°C/2°F,, fan speed reduces to 60%;
  - When T1-Tsc is lower than to 0.5°C/1°F, fan speed reduces to 40%;
  - When T1-Tsc is lower than to 0°C/0°F, fan speed reduces to 20%;;
  - When T1-Tsc is lower than to -0.5°C/-1°F, fan speed reduces to 1%;.
- Rise curve
  - When T1-Tsc is higher than or equal 0°C/0°F, fan speed increases to 20%;;
  - When T1-Tsc is higher than or equal 0.5°C/1°F, fan speed increases to 40%;
  - When T1-Tsc is higher than or equal 1°C/2°F,, fan speed increases to 60%;
  - When T1-Tsc is higher than or equal 1.5°C/3°F, fan speed increases to 80%;
  - When T1-Tsc is higher than or equal 4°C/7°F, fan speed increases to 100%.

3.4.2 Condenser Temperature Protection

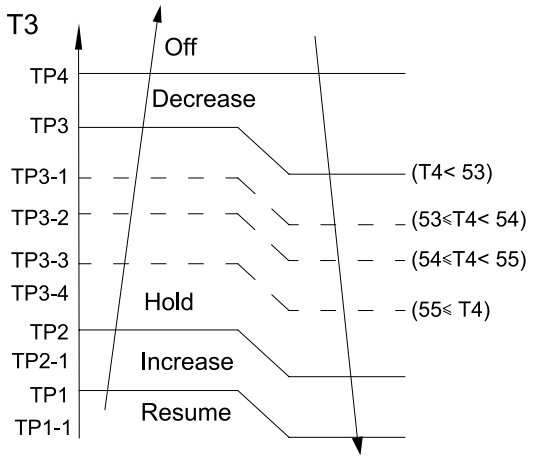

When the condenser temperature exceeds a configured value, the compressor ceases operation.

3.4.5 Evaporator Temperature Protection

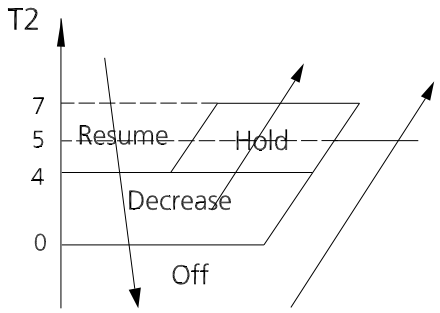

- Off: Compressor stops.
- Decrease: Decrease the running frequency to the lower level per 1 minute.
- Hold: Keep the current frequency.
- Resume: No limitation for frequency.

3.5 Heating Mode(Heat Pump Units)

3.5.1 Indoor Fan Control:

1) In heating mode, the indoor fan operates continuously. The fan speed can be set to 1%-100% and auto.

- Anti-cold air function

- If the temperature difference of T2 changes during auto fan and causes the fan speed to change, run the current fan speed for 30 seconds first, the default interval is the interval before the fan speed changes, and then judge T2 according to the current interval after 30 seconds to get the final anti-cold air interval.

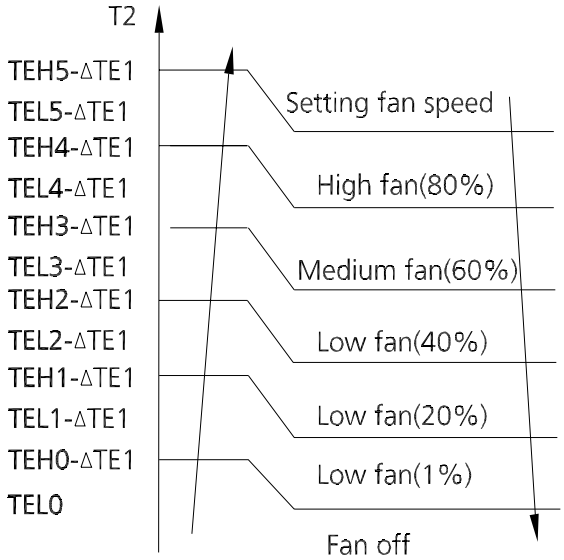

ΔTE1=0

2) Auto fan action in heating mode:

- Rise curve
  - When T1-Tsc is higher than -1.5°C/-3°F,, fan speed reduces to 80%;
  - When T1-Tsc is higher than 0°C/0°F, fan speed reduces to 60%;
  - When T1-Tsc is higher than 0.5°C/1°F, fan speed reduces to 40%;
  - When T1-Tsc is higher than 1°C/2°F, fan speed reduces to 20%.
- Descent curve
  - When T1-Tsc is lower than or equal to 0.5°C/1°F, fan speed increases to 40%;
  - When T1-Tsc is lower than or equal to 0°C/0°F, fan speed increases to 60%;
  - When T1-Tsc is lower than or equal to -1.5°C/-3°F,, fan speed increases to 80%;
  - When T1-Tsc is lower than or equal to -3°C/-5°F, fan speed increases to 100%.

3.5.2 Evaporator Coil Temperature Protection

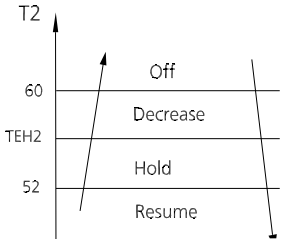

- Off: Compressor stops.
- Decrease: Decrease the running frequency to the lower level per 20 seconds.
- Hold: Keep the current frequency.
- Resume: No limitation for frequency.

4 Auto-mode

- This mode can be selected with the remote controller and the temperature setting can be adjusted between 16°C~30°C(61°F~86°F).

Case 1:

- In auto mode, the machine selects cooling, heating, or fan-only mode on the basis of **Δ**T (**Δ**T =T1-TS).

ΔT	Running mode
ΔT>2°C(4°F)	Cooling
-3℃(-5°F)≤ΔT≤2°C(4°F)	Fan-only
ΔT<-3°C(-5°F)	Heating*

Heating*: In auto mode, cooling only models run the fan

- Indoor fan will run at auto fan speed.
- The louver operates same as in relevant mode.
- If the machine switches mode between heating and cooling, the compressor will keep stopping for certain time and then choose mode according to **Δ**T.

Case 2:

In auto mode, the machine selects cooling, heating or fan-only mode on the basis of T1,Ts and Outdoor ambient temperature(T4).

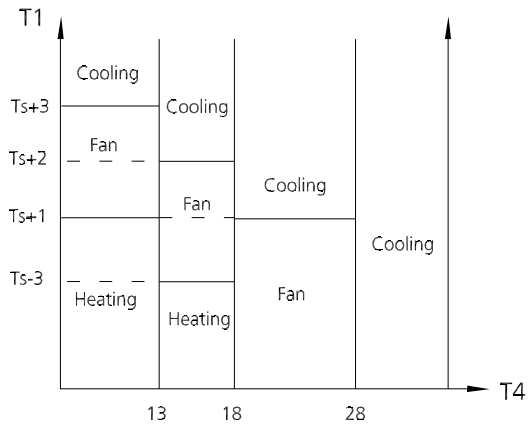

Case 3:

In auto mode, the machine selects cooling, heating or

fan-only mode on the basis of T1,Ts, Outdoor ambient temperature(T4) and relative humidity(φ).

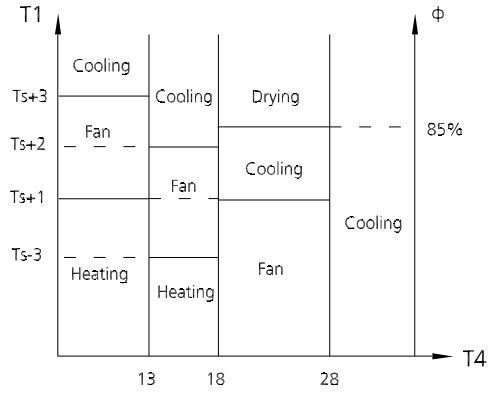

3.7 Drying mode

- In drying mode, AC operates the same as auto fan in cooling mode.
- All protections are activated and operate the same as they do that in cooling mode.
- Low Room Temperature Protection

If the room temperature is lower than 10°C/50°F, the compressor ceases operations and does not resume until room temperature exceeds 12°C/54°F.

3.8 Forced operation function

Press the AUTO/COOL button, the AC will run as below sequence:

Forced auto →Forced cooling →Off

- Forced cooling mode:

The compressor and outdoor fan continue to run and the indoor fan runs at breeze speed. After running for 30 minutes, the AC will switch to auto mode with a preset temperature of 24°C(76°F).

- Forced auto mode:

Forced auto mode operates the same as normal auto mode with a preset temperature of 24°C(76°F).

- The unit exits forced operation when it receives the following signals:
  - Switch off
  - Changes in:
    - mode
    - fan speed
    - sleep mode
    - Follow me

3.9 Timer Function

- The timing range is 24 hours.
- Timer On. The machine turns on automatically at the preset time.
- Timer Off. The machine turns off automatically at the preset time.
- Timer On/Off. The machine turns on automatically at the preset On Time, and then turns off automatically at the preset Off Time.
- Timer Off/On. The machine turns off automatically at the preset Off Time and then turns on automatically at the preset On Time.
- The timer does not change the unit operation mode. If the unit is off now, it does not start up immediately after the "timer off" function is set. When the setting time is reached, the timer LED switches off and the unit running mode remains unchanged.
- The timer uses relative time, not clock time

3.10 Sleep function

- The sleep function is available in cooling, heating, or auto mode.
- The operational process for sleep mode is as follows:
  - When cooling, the temperature rises 1°C/2°F (to not higher than 30°C/86°F) every hour. After 2 hours, the temperature stops rising and the indoor fan is fixed at low speed.
  - When heating, the temperature decreases 1°C/2°F(to not lower than 16°C/61°F) every hour. After 2 hours, the temperature stops decreasing and the indoor fan is fixed at low speed. Anti-cold wind function takes priority.
- The operating time for sleep mode is 8 hours, after which, the unit exits this mode.
- The timer setting is available in this mode.

3.11 Auto-Restart function

- The indoor unit has an auto-restart module that allows the unit to restart automatically. The module automatically stores the current settings and in the case of a sudden power failure, will restore those setting automatically within 3 minutes after power returns.

3.12 8°C/46°F Heating(Heat pump units)

In heating mode, the temperature can be set to as low as 8°C/46°F, preventing the indoor area from freezing if unoccupied during severe cold weather.

3.13 Follow me

- Once the follow me function is active, the remote control will send a signal every 3 minutes, with no beeps. The unit automatically sets the temperature according to the measurements from the remote control.
- The unit will only change modes if the information from the remote control makes it necessary, not from the unit's temperature setting.
- If the unit does not receive a signal for 7 minutes or you press "Follow Me," the function turns off. The unit regulates temperature based on its own sensor and settings.

4. Optional Functions

4.1 Silence(Multi-Zone Systems do not have this function)

- Press "Silence" or keep pressing Fan button for more than 2 seconds on the remote control to enable the SILENCE function. While this function is active, the compressor frequency is maintained at a lower level than F3. The indoor unit will run at faint breeze(1%), which reduces noise to the lowest possible level.
- When match with multi outdoor unit, this function is disabled.

4.2 ECO Function(Multi-Zone Systems do not have this function)

- Used to enter the energy efficient mode.
  - Under cooling mode, press ECO button, the remote controller will adjust the temperature automatically to 24°C/75°F, fan speed of Auto to save energy (but only if the set temperature is less than 24°C/75°F). If the set temperature is more than 24°C/75°F and 30°C/86°F, press the ECO button, the fan speed will change to Auto, the set temperature will remain unchanged.
- When pressing the ECO button, or modifying the mode or adjusting the set temperature to less than 24°C/75°F, the AC will quit the ECO operation.
- Operation time in ECO mode is 8 hours. After 8 hours the AC quits this mode.

4.3 Electrical energy consumption control function(Multi-Zone Systems do not have this function)

Press the "Gear" button on remote controller to enter the energy efficient mode in a sequence of following:

75% (up to 75% electrical energy consumption)
↓
50% (up to 50% electrical energy consumption)
↓
Previous setting mode

Turn off the unit or activate ECO, sleep, Super cool, 8°C Heating, Silence or self clean function will quit this function.

4.4 Breeze Away function (for some models)(Multi-Zone Systems do not have this function)

- This feature avoids direct airflow blowing on the body and makes you feel indulging in silky coolness.
- NOTE: This feature is available under cooling mode, fan-only mode and drying mode.

4.5 Active Clean function (for some models) (Multi-Zone Systems do not have this function)

- The Active Clean Technology washes away dust, mold, and grease that may cause odors when it adheres to the heat exchanger by automatically freezing and then rapidly thawing the frost. The internal wind wheel then keeps operating to blow-dry the evaporator, thus preventing the growth of mold and keeping the inside clean.
- When this function is turned on, the indoor unit display window appears "CL", after 20 to 45 minutes, the unit will turn off automatically and cancel Active Clean function.

Troubleshooting

Contents

1. Safety Caution 3

2. General Troubleshooting 4

2.1 Error Display (Indoor Unit) 4

2.2 Error Display on Two Way Communication Wired Controller 5

3. Engineering Mode 6

3.1 Information Inquiry 6

3.2 Advanced Function Setting 9

4. Error Diagnosis and Troubleshooting Without Error Code 12

4.1 Remote maintenance 12

4.2 Field maintenance 13

5. Quick Maintenance by Error Code 18

6. Troubleshooting by Error Code 19

6.1 EH00/ EH0A / EC51 (EEPROM Malfunction Error Diagnosis and Solution) 19

6.2 EL01 (IDU & ODU communication error Diagnosis and Solution) 20

6.3 EH03 / EC07 (Fan Speed Out of Control Diagnosis and Solution) 23

6.4 EH60/EH61/EC53/EC52/EC54/EC56 (Open Circuit or Short Circuit of Temperature Sensor Diagnosis and Solution) 25

6.5 EL0C (System lacks refrigerant Diagnosis and Solution) 26

6.6 EH0E(Water-Level Alarm Malfunction Diagnosis and Solution) 27

6.7 PC00(ODU IPM module protection Diagnosis and Solution) 28

6.8 PC01(ODU voltage protection Diagnosis and Solution) 29

6.9 PC04(Inverter compressor drive error Diagnosis and Solution) 30

Troubleshooting

Contents

6.10 PC03(Pressure protection (low or high pressure) Diagnosis and Solution) 31

6.11 PC02(Compressor top (or IPM) temp. protection Diagnosis and Solution) 34

6.12 PC0L (Low ambient temperature protection) 35

6.13 EHb3 (Communication malfunction between wire and master control) Diagnosis and Solution 36

6.14 EHbA(Communication error between the indoor unit and the external fan module)/EH3A(External fan DC bus voltage is too low protection)/ EH3b(External fan DC bus voltage is too high fault) diagnosis and solution 37

6.15 FHCC(Refrigerant sensor error) or EHC3(Refrigerant sensor is out of range) diagnosis and solution 38

6.16 EHC1(Refrigerant sensor detects leakage) or EHC2(Refrigerant sensor is out of range and leakage is detected) diagnosis and solution 39

6.17 EL11 (Communication malfunction between main unit and secondary units(for twins system) Diagnosis and Solution)..... 40

6.18 EH12 (Main unit or secondary units malfunction(for twins system)) Diagnosis and Solution) 40

7. Check Procedures 42

1. Safety Caution

WARNING

Be sure to turn off all power supplies or disconnect all wires to avoid electric shock.
While checking indoor/outdoor PCB, please equip oneself with antistatic gloves or wrist strap to avoid damage to the board.

WARNING

Electricity remains in capacitors even when the power supply is off.
Ensure the capacitors are fully discharged before troubleshooting.

NOTE: If using the inverter test tool maintenance, remove the big handle, take out the detection cable, take out female end of the cable and connect the inverter test tool. After the maintenance is completed, insert the female end back into the port.

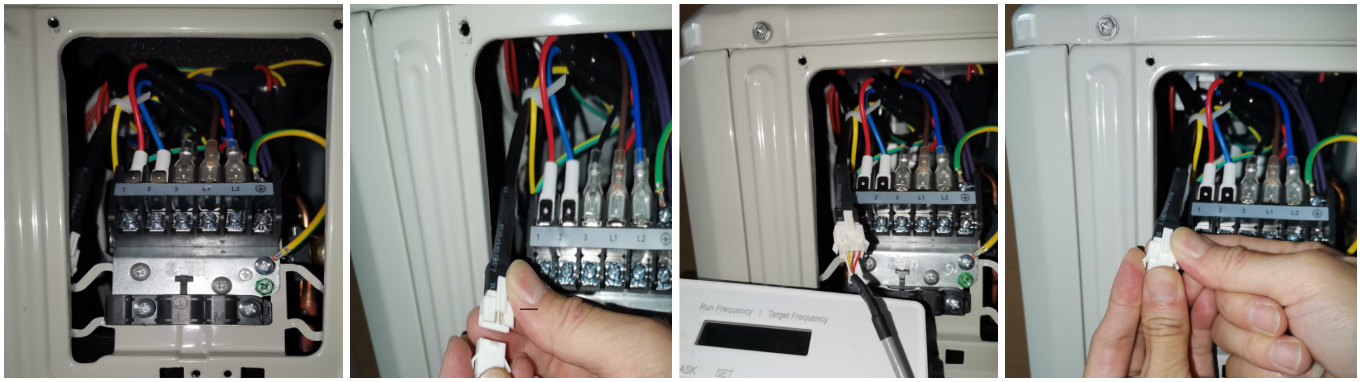

Note: This picture is for reference only. Actual appearance may vary.

2. General Troubleshooting

2.1 Error Display (Indoor Unit)

When the indoor unit encounters a recognized error, the operation lamp will flash in a corresponding series, the timer lamp may turn on or begin flashing, and an error code will be displayed. These error codes are described in the following table:

Display	Error Information	Solution
FC	Forced cooling(Not an error code)	--
EC07	ODU fan speed out of control	TS23
EC51	ODU EEPROM parameter error	TS19
EC52	ODU coil temp. sensor(T3) error	TS25
EC53	ODU ambient temp. sensor(T4) error	TS25
EC54	COMP. discharge temp. sensor(TP) error	TS25
EC56	IDU coil outlet temp. sensor(T2B) error(Multi-zone)	TS25
EC01	Other IDU refrigerant sensor detects leakage (Multi-zone)	TS39
EH00	IDU EEPROM malfunction	TS19
EH03	IDU fan speed out of control	TS23
EH0A	IDU EEPROM parameter error	TS19
EH0E	Water-level alarm malfunction	TS27
EH12	Main unit or secondary units malfunction	TS40
EH3A	External fan DC bus voltage is too low protection	TS37
EH3b	External fan DC bus voltage is too high fault	TS37
EH60	IDU room temp. sensor (T1) error	TS25
EH61	IDU evaporator coil temp. sensor (T2) error	TS25
EHbA	Communication error between the indoor unit and the external fan module	TS37
EHC1	Refrigerant sensor detects leakage	TS39
EHC2	Refrigerant sensor is out of range and leakage is detected	TS39
EHC3	Refrigerant sensor is out of range	TS38

EL01	IDU & ODU communication error	TS20
EL0C	System lacks refrigerant	TS26
EL11	Communication malfunction between main unit and secondary units	TS40
FHCC	Refrigerant sensor error	TS38
PC00	ODU IPM module protection	TS28
PC01	ODU voltage protection	TS29
PC02	Compressor top (or IPM) temp. protection	TS34
PC03	Pressure protection (low or high pressure) (for some models)	TS31
PC04	Inverter compressor drive error	TS30
PC0L	Low ambient temperature protection(for some models)	TS35
----	IDUs mode conflict(Multi-zone)	--

For other errors:

The display board may show a garbled code or a code undefined by the service manual. Ensure that this code is not a temperature reading.

Troubleshooting:

Test the unit using the remote control. If the unit does not respond to the remote, the indoor PCB requires replacement. If the unit responds, the display board requires replacement.

LED flash frequency:

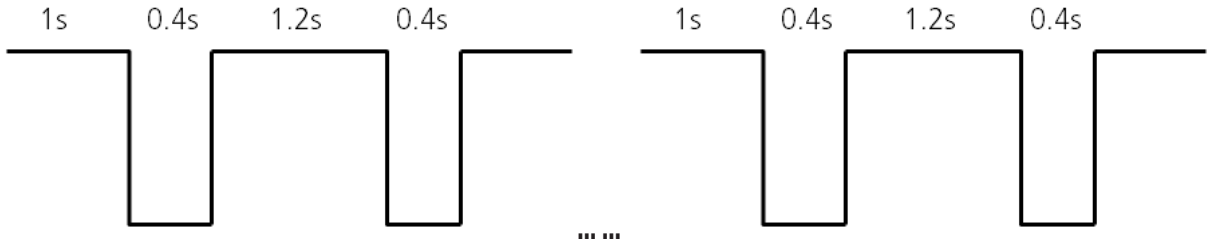

2.2 Error Display on Two Way Communication Wired Controller

Display	Malfunction or Protection	Solution
EHb3	Communication malfunction between wire and master control((for KJR-120X/KJR-120M/ KJR-120N series wired controller)	TS37

The other error codes displayed on the wire controller are same from those on the unit.

3. Engineering Mode

3.1 Information Inquiry

In order to enter to the engineering mode, and check the data of the system (data checking mode), Please make the following steps:

- Make sure that the AC is on the standby status, or working normally in a non-locked conditions.
- Press "Power" + "Fan" buttons together for 7s until the remote controller screen shows "0", and also "Auto, Cool, Dry, Heat, Battery " icons will be displayed at the same time.
- Press "Up" or "Down" button to choose different channel number that you want to check (from 0-30) on the remote controller, and then the display will show the parameter value

Channel	Code	Meaning	Remark
0		Error code	Refer to next list of error code Empty means no error
1	T1	Room temperature	Actual data, °C
2	T2	Indoor coil temperature	Actual data,°C
3	T3	Outdoor coil temperature	Actual data, °C
4	T4	Ambient temperature	Actual data, °C
5	TP	Discharge temperature	Actual data,°C
6	FT	Targeted frequency	Actual data
7	Fr	Actual frequency	Actual data
8	dL	Running current	3.2A=3
9	AC	AC voltage	
10	Sn	Reserved	
11	od	Indoor operating mode	0-Off;1-Cooling;2-Heating; 3-Fan only;4-Drying;5-Auto; 7-defrosting;12-Active clean
12	Pr	Outdoor fan speed	Actual data/8
13	Lr	EXV opening steps	Actual data/8
14	Ir	Indoor fan speed	Actual data/8
15	Hu	Humidity (if a sensor there)	Actual data, %
16	TT	Set temperature including compensation	Actual data, °C
17	nA	Reserved	
18	nA	Reserved	
19	Uo	Outdoor DC bus voltage	
20	oT	Target Frequency calculated by indoor	Without limitation
21~30	nA	Reserved	

Please note that:

1-The Channel number indicates a certain parameter value (Check the below table).

2-The indoor unit display will show the code for 2s, and then the parameter value.

3-In the engineering mode, the other keys or operations are invalid except for the following buttons "Power", "Up", "Down" and "Ok".

4-In order to exit from the engineering mode, press "Power" + "Fan" buttons together for 2s to quit Checking and back to the home screen.

5-The engineering mode will be exited if there is no valid input data for 60s.

Error code of engineer mode

Display	Error Information
EH00	IDU EEPROM malfunction
EH0A	IDU EEPROM parameter error
EL01	IDU & ODU communication error
EH6A	Communication error between indoor unit and external fan module
EH30	Parameters error of indoor external fan
EH35	Phase failure of indoor external fan
EH36	Indoor external fan current sampling bias fault
EH37	Indoor external fan zero speed failure
EH38	Indoor external fan stall failure
EH39	Out of step failure of indoor external fan
EH3A	Low voltage protection of indoor external fan DC bus
EH3b	Indoor external fan DC bus voltage is too high fault
EH3E	Indoor external fan overcurrent fault
EH3F	Indoor external fan module protection/hardware overcurrent protection
EH03	IDU fan speed out of control
EC51	ODU EEPROM parameter error
EC52	ODU coil temp. sensor(T3) error
EC53	ODU ambient temp. sensor(T4) error
EC54	COMP. discharge temp. sensor(TP) error
EC55	IGBT temperature sensor TH is in open circuit or short circuit
EC0d	Outdoor unit malfunction
EH60	IDU room temp. sensor (T1) error
EH61	IDU evaporator coil temp. sensor (T2) error
EC71	Outdoor external fan overcurrent fault
EC75	Outdoor external fan module protection/hardware overcurrent protection
EC72	Outdoor external fan phase failure
EC74	Outdoor external fan current sampling bias fault
EC73	Zero speed failure of outdoor unit DC fan
EC07	ODU fan speed out of control(
EHb5	Intelligent eye communication failure
EL0C	Refrigerant leak detected
EH0E	Water-level alarm malfunction
EH0F	Intelligent eye malfunction
FH07	Communication malfunction between indoor unit and auto-lifting panel
PC00	ODU IPM module protection
PC10	Over low voltage protection
PC11	Over voltage protection
PC12	DC voltage protection
PC02	Top temperature protection of compressor or High temperature protection of IPM module

PC40	Communication error between outdoor main chip and compressor driven chip
PC41	Current Input detection protection
PC42	Compressor start error
PC43	Lack of phase (3 phase) protection
PC44	Outdoor unit zero speed protection
PC45	341PWM error
PC46	Compressor speed malfunction
PC49	Compressor over current protection
PC06	Compressor discharge temperature protection
PC08	Outdoor current protection
PH09	Anti-cold air in heating mode
PC0F	PFC module malfunction
PC30	System overpressure protection
PC31	System pressure is too low protection
PC03	Pressure protection
PC0L	Outdoor low ambient temperature protection
PH90	Evaporator coil temperature over high protection
PH91	Evaporator coil temperature over low Protection
PC0A	Condenser high temperature protection
PH0C	Indoor unit humidity sensor failure
LH00	Frequency limit caused by T2
LH30	Indoor external fan current limit
LH31	Indoor external fan voltage limit
LC01	Frequency limit caused by T3
LC02	Frequency limit caused by TP
LC05	Frequency limit caused by voltage
LC03	Frequency limit caused by current
LC06	Frequency limit caused by PFC
LC30	Frequency limit caused by high pressure
LC31	Frequency limit caused by low pressure
LH07	Frequency limit caused by remote controller
----	IDUs mode conflict(match with multi outdoor unit)
nA	No malfunction and protection

3.2 Advanced Function Setting

In order to enter to the engineering mode, and check the advanced function settings, Please make the following steps:

If you want to check the current functions set value (Presetting Page):

1- Firstly, you need to disconnect the power supply from the unit, and wait for 1 minute.

2- Then connect the power supply again to the unit (the unit should be under the standby state).

3- Press "Power" + "Fan" buttons together for 7s until the remote controller screen shows "0", and also "Auto, Cool, Dry, Heat, Battery " icons will be displayed at the same time.

4- Press "Up" or "Down" button to choose different channel number that you want to check (from 0-30) on the remote controller.

5- Then Press "Power" button for 2s until the remote controller screen shows "Ch" .

6- Press "OK" button to query the current function set value while the remote controller shows "CH", and the function set value will be shown on the indoor unit display.

If you want to change the current functions set value:

1- Firstly, you need to disconnect the power supply from the unit, and wait for 1 minute.

2- Then connect the power supply again to the unit (the unit should be under the standby state).

3- Press "Power" + "Fan" buttons together for 7s until the remote controller screen shows "0", and also "Auto, Cool, Dry, Heat, Battery " icons will be displayed at the same time.

4- Press "Up" or "Down" button to choose different channel number that you want to change (from 0-30) on the remote controller.

5- Then Press "Power" button for 2s until the remote controller screen shows "Ch".

6- Press "Up" or "Down" button to choose the desired set value from the screen of the remote control.

7- Then Press "OK" to send the new set value to the indoor unit, and the indoor unit will display "CS", which means that the new set value is uploaded successfully.

8- Finally, disconnect the power supply again from the unit, and wait for 10 minutes, then connect it again.

Please note that:

1- The Channel number indicates a certain function, and each number will be showed on the indoor unit screen indicates the current function set value (Check the below table).

2- In the engineering mode, the other keys or operations are invalid except for the following buttons "Power", "Up", "Down" , and "Ok".

3- In order to set a new set value successfully, you need to finish the steps (from 2 to 7) within 1 minute only.

4- The engineering mode will be exited if there is no valid input data for 60s.

5- In order to exit from the engineering mode, Pleas follow the following steps:

- Press "Power" button for 2s press until the remote controller screen shows "0".
- Then Press "Power" + "Fan" buttons together for 2s to quit the engineering mode and back to the home screen.

Channel	Function	Parameter Value Meaning	Remark
0	Capacity setting (Btu/h)	1-100K	
1	Auto-restart function	0 – Inactive 1 – Active	
2	Fan control when Ts reached	1- Fan stop 2 - Fan runs at lowest RPM 3 - Fan runs at setting RPM 4~11 - Fan stops for 4 mins and runs for 1min	
3	Mode lock	CH–Cooling and heating (all modes) HH–Heating only (Heating + Fan only) CC–Cooling only (Cooling + Drying + Fan only) nU–Cooling and heating without Auto	Remote controller will change as well.
4	Lowest setting temperature	16-24	Remote controller will change as well.
5	Highest setting temperature	25-30	Remote controller will change as well.
6	Reserved		
7	Twins selection	0 – No twins; 1 – Master unit; 2– Secondary unit	
8	/	Nothing to set	
9	/	Nothing to set	
10	/	Nothing to set	
11	Min. frequency limitation in cooling mode	10, 11, 12, …, 49, 50, -- (Cancel)	
12	Min. frequency limitation in heating mode	10, 11, 12, …, 49, 50, -- (Cancel)	
13	Max frequency selection in T4 limitation of Zone6	20, 21, 22, …, 149, 150, -- (Cancel)	
14	/	Nothing to set	
15	Frequency selection of outdoor forced-operation	10, 11, 12, …, 249, 250, -- (Cancel)	
16	One button reset	rS – Reset	
17	nA	Nothing to set	
18	Capacity setting(kW)	23,26,32,35,51,72,120,-- (Cancel)	
19	Max. frequency selection in cooling mode	40, 41, 42, …, 83, 84, -- (Cancel)	
20	Max. frequency selection in heating mode	40, 41, 42, …, 83, 84, -- (Cancel)	Without limitation
21	Cooling temperature compensation	-3.0, -2.5, -2.0, …, 3.0, 3.5, -- (Cancel)	

22	Heating temperature compensation	-6.5, -6.0, -5.5, …, 0.5, 1.0, 1.5, …, 7.0, 7.5, -- (Cancel)	
23	Max. fan speed selection in cooling	-41, -40, -39, …, 19, 20, -- (Cancel)	
24	Min. fan speed selection in cooling	-41, -40, -39, …, 19, 20, -- (Cancel)	
25	Max. fan selection in heating	-41, -40, -39, …, 19, 20, -- (Cancel)	
26	Min. fan speed selection in heating	-41, -40, -39, …, 19, 20, -- (Cancel)	
27	Reserved	Nothing to set	
28	Anti-cold air Stop Fan Temperature	16~28	Remote controller will change as well.
29	Reserved	Nothing to set	
30	Reserved	Nothing to set	

4. Error Diagnosis and Troubleshooting Without Error Code

WARNING

Be sure to turn off unit before any maintenance to prevent damage or injury.

4.1 Remote maintenance

SUGGESTION: When troubles occur, please check the following points with customers before field maintenance.

No.	Problem	Solution
1	Unit will not start	TS14 - TS15
2	The power switch is on but fans will not start	TS14 - TS15
3	The temperature on the display board cannot be set	TS14 - TS15
4	Unit is on but the wind is not cold(hot)	TS14 - TS15
5	Unit runs, but shortly stops	TS14 - TS15
6	The unit starts up and stops frequently	TS14 - TS15
7	Unit runs continuously but insufficient cooling(heating)	TS14 - TS15
8	Cool can not change to heat	TS14 - TS15
9	Unit is noisy	TS14 - TS15

4.2 Field maintenance

	Problem	Solution
1	Unit will not start	TS16 - TS17
2	Compressor will not start but fans run	TS16 - TS17
3	Compressor and condenser (outdoor) fan will not start	TS16 - TS17
4	Evaporator (indoor) fan will not start	TS16 - TS17
5	Condenser (Outdoor) fan will not start	TS16 - TS17
6	Unit runs, but shortly stops	TS16 - TS17
7	Compressor short-cycles due to overload	TS16 - TS17
8	High discharge pressure	TS16 - TS17
9	Low discharge pressure	TS16 - TS17
10	High suction pressure	TS16 - TS17
11	Low suction pressure	TS16 - TS17
12	Unit runs continuously but insufficient cooling	TS16 - TS17
13	Too cool	TS16 - TS17
14	Compressor is noisy	TS16 - TS17
15	Horizontal louver can not revolve	TS16 - TS17

1.Remote Maintenance	Electrical Circuit							Refrigerant Circuit							
Possible causes of trouble	Power failure	The main power tripped	Loose connections	Faulty transformer	The voltage is too high or too low	The remote control is powered off	Broken remote control	Dirty air filter	Dirty condenser fins	The setting temperature is higher/lower than the room's(cooling/heating)	The ambient temperature is too high/low when the mode is cooling/heating	Fan mode	SILENCE function is activated(optional function)	Frosting and defrosting frequently	
Unit will not start	☆	☆	☆	☆											
The power switch is on but fans will not start			☆	☆	☆										
The temperature on the display board cannot be set						☆	☆								
Unit is on but the wind is not cold(hot)										☆	☆	☆			
Unit runs, but shortly stops					☆					☆	☆				
The unit starts up and stops frequently					☆						☆			☆	
Unit runs continuously but insufficient cooling(heating)								☆	☆	☆	☆		☆		
Cool can not change to heat															
Unit is noisy															
Test method / remedy	Test voltage	Close the power switch	Inspect connections - tighten	Change the transformer	Test voltage	Replace the battery of the remote control	Replace the remote control	Clean or replace	Clean	Adjust the setting temperature	Turn the AC later	Adjust to cool mode	Turn off SILENCE function.	Turn the AC later	

1.Remote Maintenance	Others					
Possible causes of trouble	Heavy load condition	Loosen hold down bolts and / or screws	Bad airproof	The air inlet or outlet of either unit is blocked	Interference from cell phone towers and remote boosters	Shipping plates remain attached
Unit will not start						
The power switch is on but fans will not start					☆	
The temperature on the display board cannot be set						
Unit is on but the wind is not cold(hot)						
Unit runs, but shortly stops						
The unit starts up and stops frequently				☆		
Unit runs continuously but insufficient cooling(heating)	☆		☆	☆		
Cool can not change to heat						
Unit is noisy		☆				☆
Test method / remedy	Check heat load	Tighten bolts or screws	Close all the windows and doors	Remove the obstacles	Reconnect the power or press **ON/OFF** button on remote control to restart operation	Remove them

2.Field Maintenance	Refrigerant Circuit																		Others				
Possible causes of trouble	Compressor stuck	Shortage of refrigerant	Restricted liquid line	Dirty air filter	Dirty evaporator coil	Insufficient air through evaporator coil	Overcharge of refrigerant	Dirty or partially blocked condenser	Air or incompressible gas in refrigerant cycle	Short cycling of condensing air	High temperature condensing medium	Insufficient condensing medium	Broken compressor internal parts	Inefficient compressor	Expansion valve obstructed	Expansion valve or capillary tube closed completely	Leaking power element on expansion valve	Poor installation of feeler bulb	Heavy load condition	Loosen hold down bolts and / or screws	Shipping plates remain attached	Poor choices of capacity	Contact of piping with other piping or external plate
Unit will not start																							
Compressor will not start but fans run	☆																						
Compressor and condenser (outdoor) fan will not start																							
Evaporator (indoor) fan will not start																							
Condenser (Outdoor) fan will not start																							
Unit runs, but shortly stops		☆	☆				☆	☆								☆	☆						
Compressor short-cycles due to overload		☆					☆	☆															
High discharge pressure							☆	☆	☆	☆	☆	☆											
Low discharge pressure		☆												☆									
High suction pressure							☆							☆				☆	☆				
Low suction pressure		☆	☆	☆	☆	☆									☆	☆	☆						
Unit runs continuously but insufficient cooling		☆	☆	☆	☆	☆		☆	☆	☆				☆					☆			☆	
Too cool																							
Compressor is noisy							☆						☆							☆	☆		☆
Horizontal louver can not revolve																							
Test method / remedy	Replace the compressor	Leak test	Replace restricted part	Clean or replace	Clean coil	Check fan	Change charged refrigerant volume	Clean condenser or remove obstacle	Purge, evacuate and recharge	Remove obstruction to air flow	Remove obstruction in air or water flow	Remove obstruction in air or water flow	Replace compressor	Test compressor efficiency	Replace valve	Replace valve	Replace valve	Fix feeler bulb	Check heat load	Tighten bolts or screws	Remove them	Choose AC of lager capacity or add the number of AC	Rectify piping so as not to contact each other or with external plate

2.Field Maintenance	Electrical Circuit														
Possible causes of trouble	Power failure	Blown fuse or varistor	Loose connections	Shorted or broken wires	Safety device opens	Faulty thermostat / room temperature sensor	Wrong setting place of temperature sensor	Faulty transformer	Shorted or open capacitor	Faulty magnetic contactor for compressor	Faulty magnetic contactor for fan	Low voltage	Faulty stepping motor	Shorted or grounded compressor	Shorted or grounded fan motor
Unit will not start	☆	☆	☆	☆	☆			☆							
Compressor will not start but fans run				☆		☆			☆	☆				☆	
Compressor and condenser (outdoor) fan will not start				☆		☆				☆					
Evaporator (indoor) fan will not start				☆					☆		☆				☆
Condenser (Outdoor) fan will not start				☆		☆			☆		☆				☆
Unit runs, but shortly stops										☆		☆			
Compressor short-cycles due to overload										☆		☆			
High discharge pressure															
Low discharge pressure															
High suction pressure															
Low suction pressure															
Unit runs continuously but insufficient cooling															
Too cool						☆	☆								
Compressor is noisy															
Horizontal louver can not revolve			☆	☆									☆		
Test method / remedy	Test voltage	Inspect fuse type & size	Inspect connections - tighten	Test circuits with tester	Test continuity of safety device	Test continuity of thermostat / sensor & wiring	Place the temperature sensor at the central of the air inlet grille	Check control circuit with tester	Check capacitor with tester	Test continuity of coil & contacts	Test continuity of coil & contacts	Test voltage	Replace the stepping motor	Check resistance with multimeter	Check resistance with multimeter

5. Quick Maintenance by Error Code

If you do not have the time to test which specific parts are faulty, you can directly change the required parts according the error code.

You can find the parts to replace by error code in the following table.

Part requiring replacement	Error Code									
	EH00/ EH0A	EL01	EH03	EH60	EH61	EL0C	EHC1/ EHC2	EH0E	EC53	EH0b
Indoor PCB	✓	✓	✓	✓	✓	✓	x	✓	x	✓
Outdoor PCB	x	✓	x	x	x	x	x	x	✓	x
Indoor fan motor	x	x	✓	x	x	x	x	x	x	x
T1 sensor	x	x	x	✓	x	x	x	x	x	x
T2 sensor	x	x	x	x	✓	✓	x	✓	x	x
T3 sensor	x	x	x	x	x	x	x	x	x	x
T4 sensor	x	x	x	x	x	x	x	x	✓	x
Reactor	x	✓	x	x	x	x	x	x	x	x
Compressor	x	x	x	x	x	x	x	x	x	x
Additional refrigerant	x	x	x	x	x	✓	✓	✓	x	x
Water-level switch	x	x	x	x	x	x	x	✓	x	x
Water pump	x	x	x	x	x	x	x	✓	x	x
Display board	x	x	x	x	x	x	x	x	x	✓

Part requiring replacement	EC54	EC51	EC52	EC56	EC07	PC00	PC01	PC02	PC04	PC03	FHCC/ EHC3
Indoor PCB	x	x	x	x	x	x	x	x	x	x	✓
Outdoor PCB	✓	✓	✓	✓	✓	✓	✓	✓	✓	✓	x
Outdoor fan motor	x	x	x	x	✓	✓	x	✓	✓	x	x
T3 sensor	x	x	✓	x	x	x	x	x	x	x	x
TP sensor	✓	x	x	x	x	x	x	x	x	x	x
T2B sensor	x	x	x	✓	x	x	x	x	x	x	x
Refrigerant sensor	x	x	x	x	x	x	x	x	x	x	✓
Reactor sensor	x	x	x	x	x	x	✓	x	x	x	x
Compressor	x	x	x	x	x	✓	x	x	✓	x	x
IPM module board	x	x	x	x	x	✓	✓	✓	✓	x	x
Pressure protector	x	x	x	x	x	x	x	x	x	✓	x
Additional refrigerant	x	x	x	x	x	x	x	x	x	✓	x

6. Troubleshooting by Error Code

6.1 EH00/ EH0A / EC51 (EEPROM Malfunction Error Diagnosis and Solution)

Description: Indoor or outdoor PCB main chip does not receive feedback from EEPROM chip.

Recommended parts to prepare:

- Indoor PCB
- Outdoor PCB

Troubleshooting and repair:

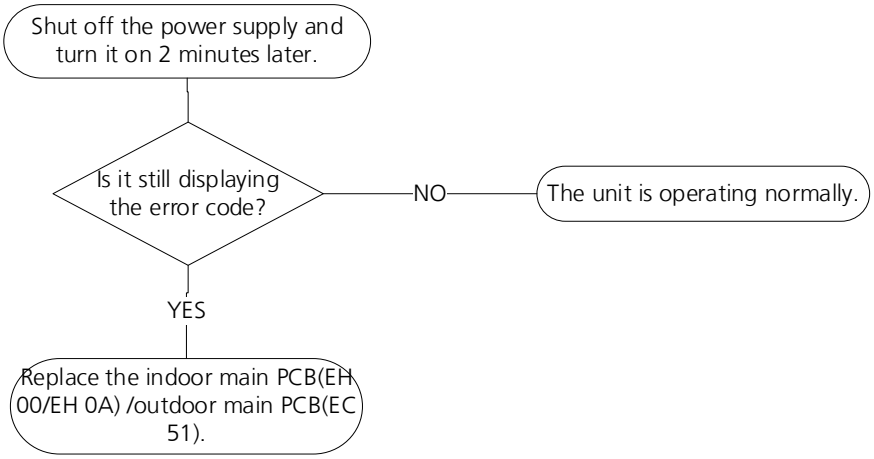

Remarks:
EEPROM: A read-only memory whose contents can be erased and reprogrammed using a pulsed voltage.

The location of the EEPROM chip on the indoor and outdoor PCB is shown in the following two images:

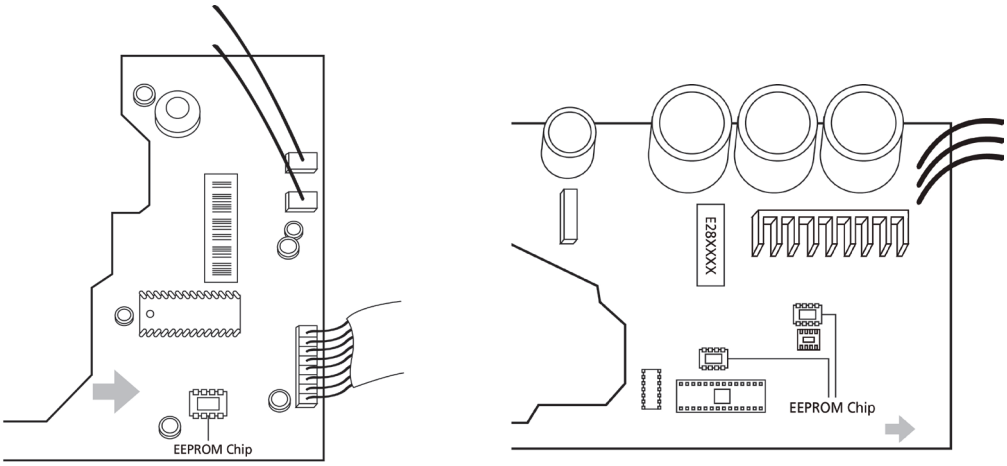

This pictures are only for reference, actual appearance may vary.

Troubleshooting and repair of compressor driven chip EEPROM parameter error and communication error between outdoor main chip and compressor driven chip are same as EC51.

6.2 EL01 (IDU & ODU communication error Diagnosis and Solution)

Description: Indoor unit can not communicate with outdoor unit

Recommended parts to prepare:

- Indoor PCB
- Outdoor PCB
- Reactor

Troubleshooting and repair:

Current loop Communication(S Communication):

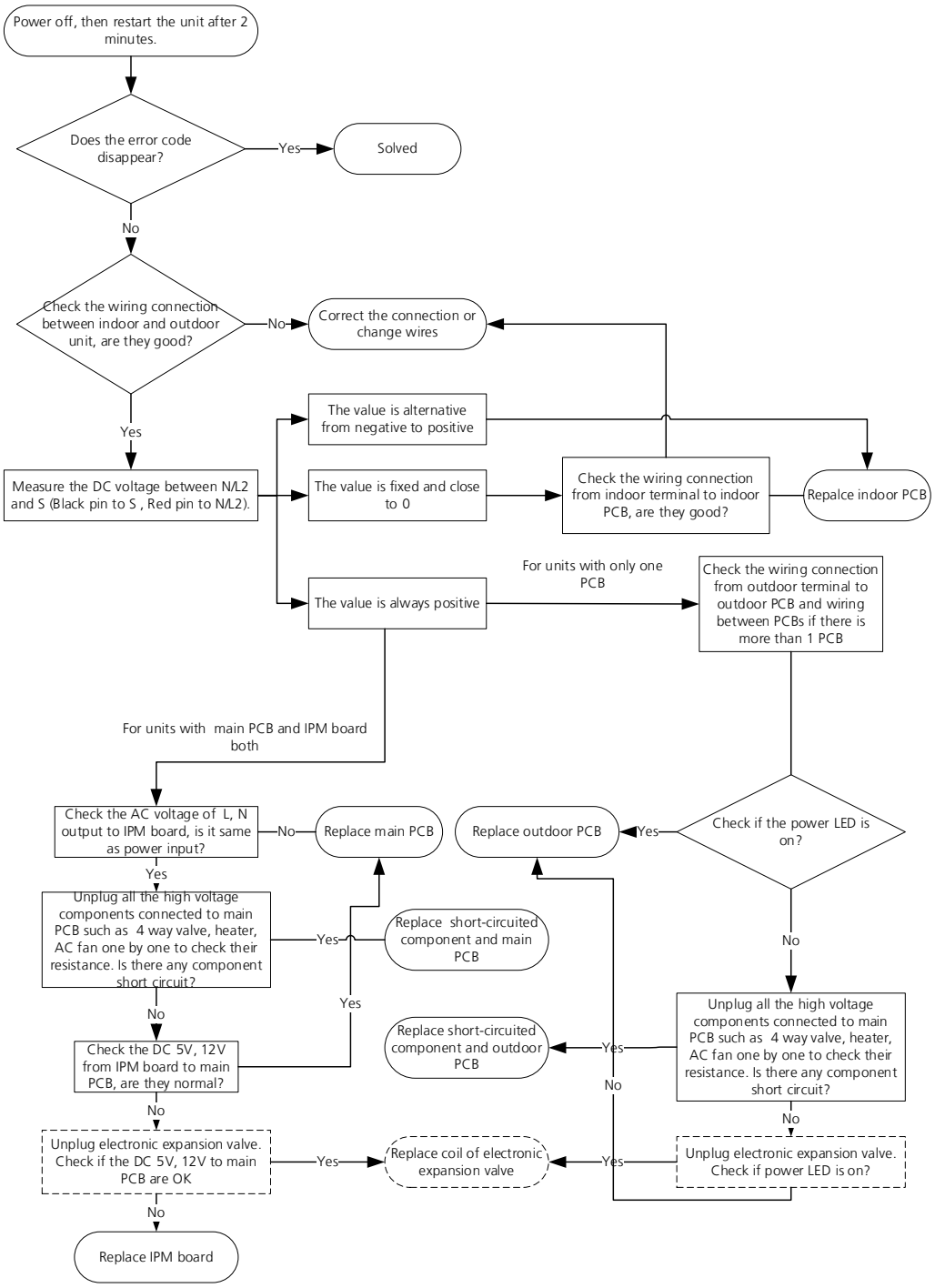

Remarks:

- Use a multimeter to test the DC voltage between 2 port(or S or L2 port) and 3 port(or N or S port) of outdoor unit. The red pin of multimeter connects with 2 port(or S or L2 port) while the black pin is for 3 port(or N or S port) .
- When AC is operating normally, the voltage is moving alternately as positive values and negative values
- If the outdoor unit has malfunction, the voltage has always been the positive value.
- While if the indoor unit has malfunction, the voltage has always been a certain value.

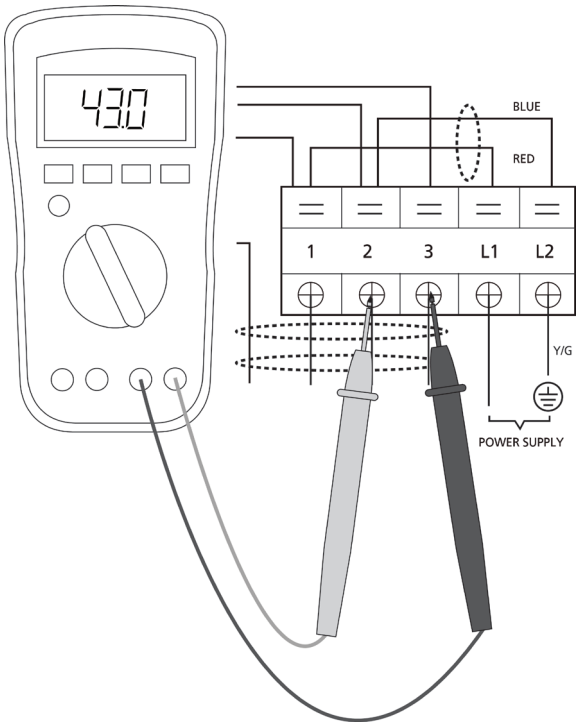

S and N or L2 and S or 2 and 3

- Use a multimeter to test the resistance of the reactor which does not connect with capacitor.
- The normal value should be around zero ohm. Otherwise, the reactor must have malfunction.

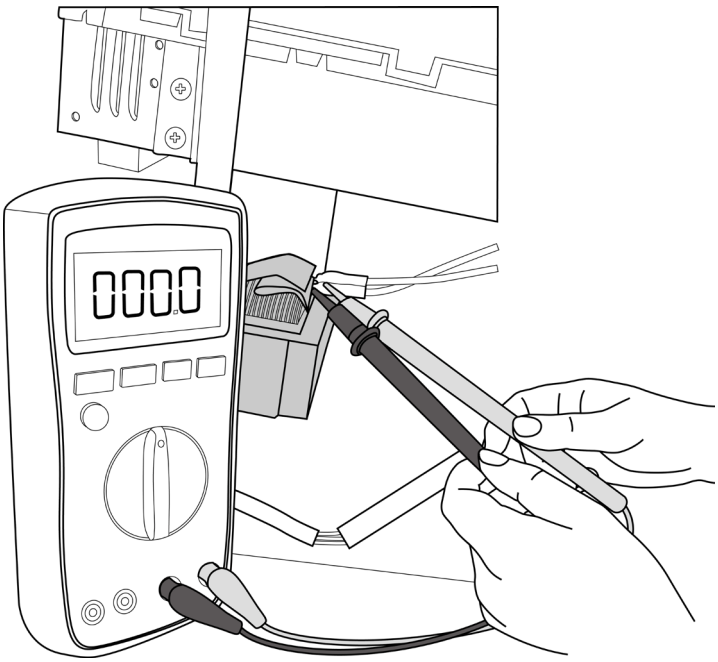

Note: The picture and the value are only for reference, actual condition and specific value may vary.

485 Communication(S1,S2 Communication):

Recommended parts to prepare:

- Signal wires
- Magnet ring
- Indoor PCB
- Outdoor PCB

Troubleshooting and repair:

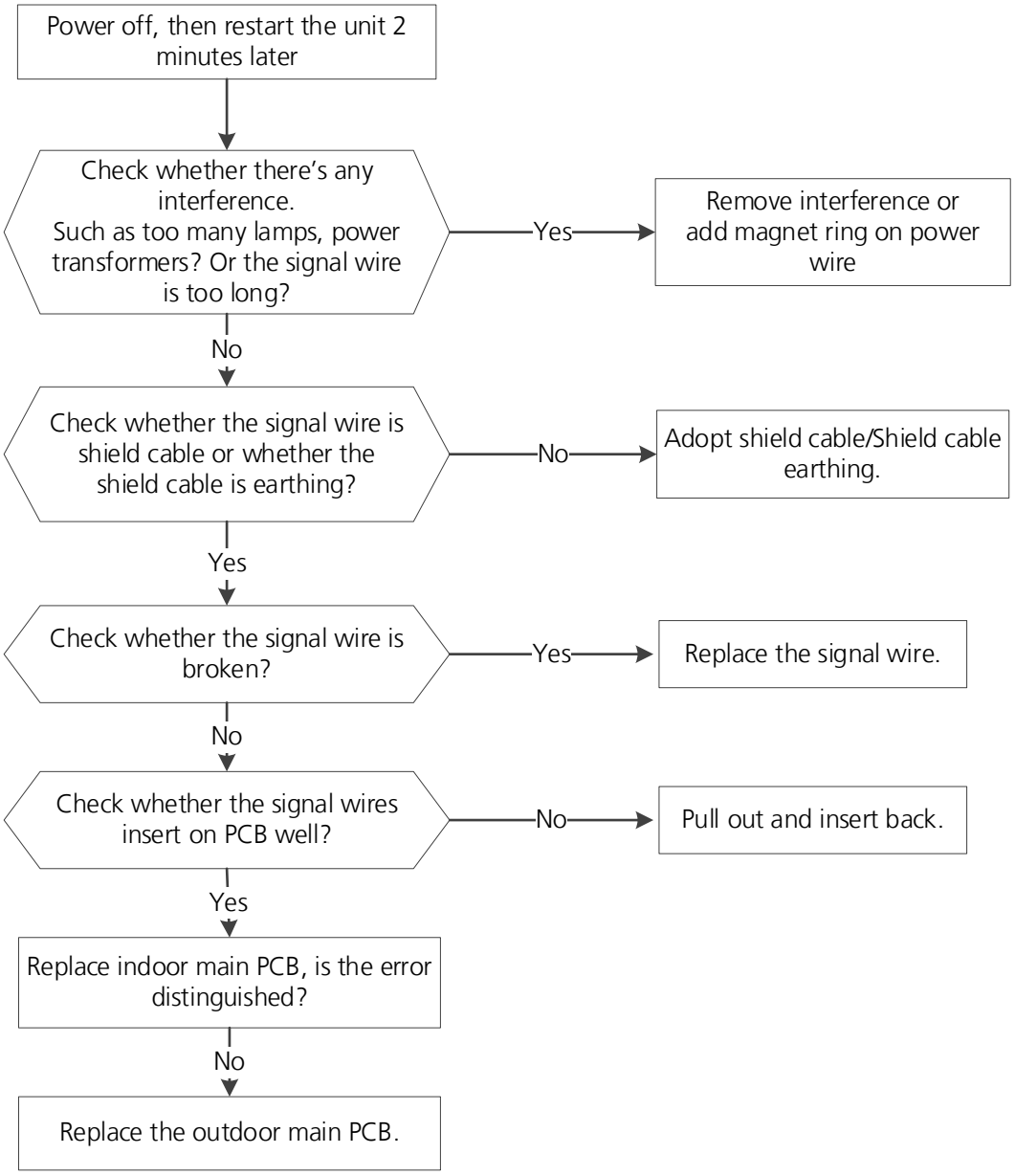

6.3 EH03 / EC07 (Fan Speed Out of Control Diagnosis and Solution)

Description: When indoor / outdoor fan speed keeps too low or too high for a certain time, the unit ceases operation and the LED displays the failure.

Recommended parts to prepare:

- Connection wires
- Fan assembly
- Fan motor
- PCB

Troubleshooting and repair:

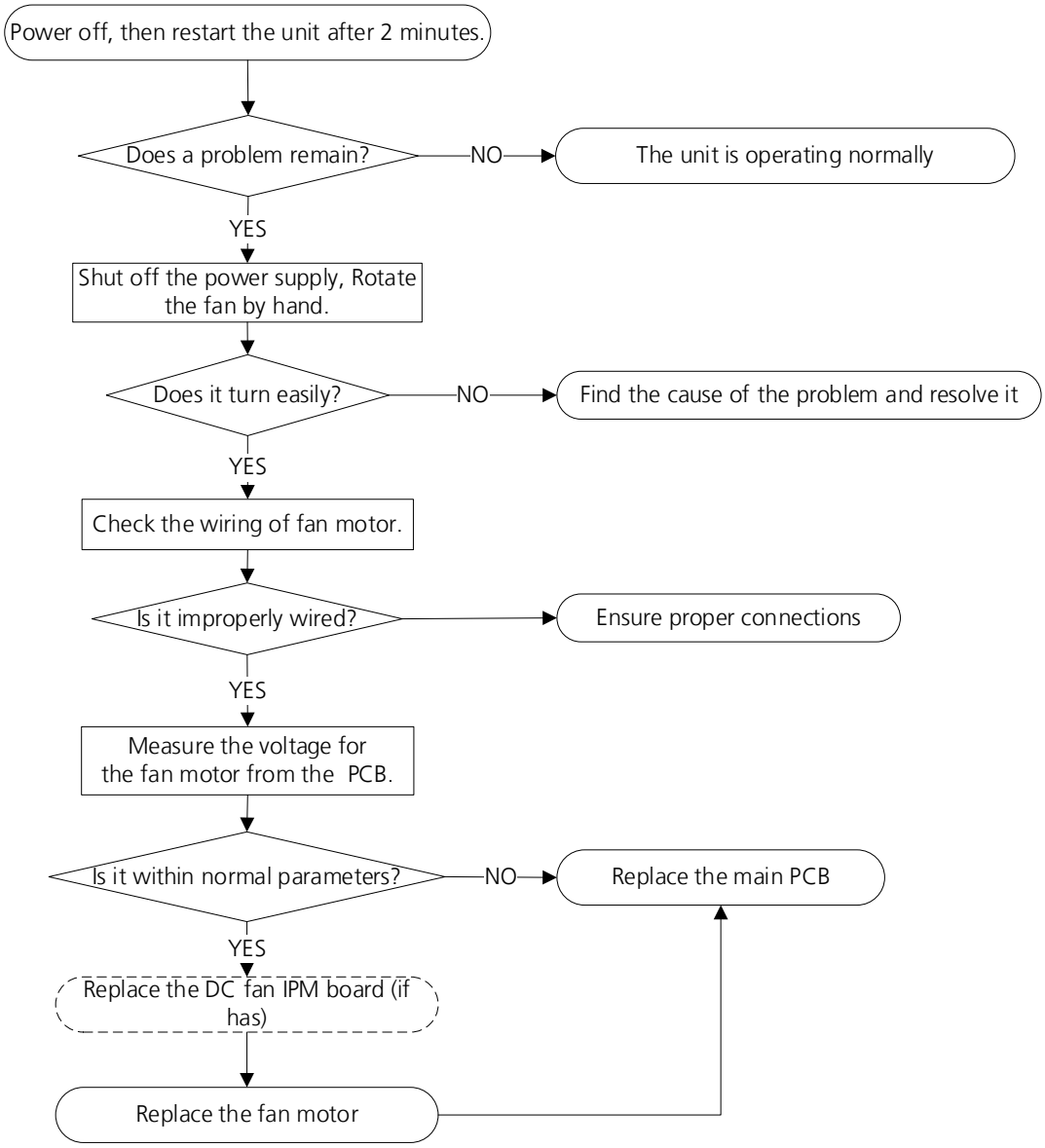

Index:

1. Indoor or Outdoor DC Fan Motor(control chip is in fan motor)

Power on and when the unit is in standby, measure the voltage of pin1-pin3, pin4-pin3 in fan motor connector. If the value of the voltage is not in the range showing in below table, the PCB must has problems and need to be replaced.

No.	Color	Signal	Voltage
1	Red	Vs/Vm	192V~380V
2	---	---	---
3	Black	GND	0V
4	White	Vcc	13.5-16.5V
5	Yellow	Vsp	0~6.5V
6	Blue	FG	13.5-16.5V

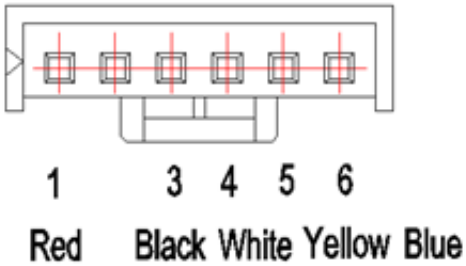

3. Outdoor DC Fan Motor (control chip is in outdoor PCB)

Release the UVW connector. Measure the resistance of U-V, U-W, V-W. If the resistance is not equal to each other, the fan motor must has problems and need to be replaced. otherwise the PCB must has problems and need to be replaced.

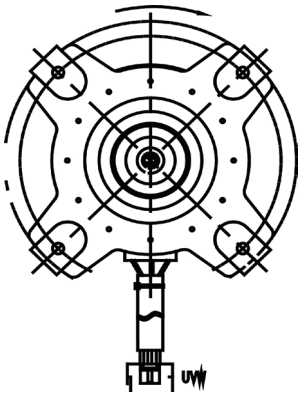

6.4 EH60/EH61/EC53/EC52/EC54/EC56 (Open Circuit or Short Circuit of Temperature Sensor Diagnosis and Solution)

Description: If the sampling voltage is lower than 0.06V or higher than 4.94V, the LED displays the failure.

Recommended parts to prepare:

- Connection wires
- Sensors
- PCB

Troubleshooting and repair:

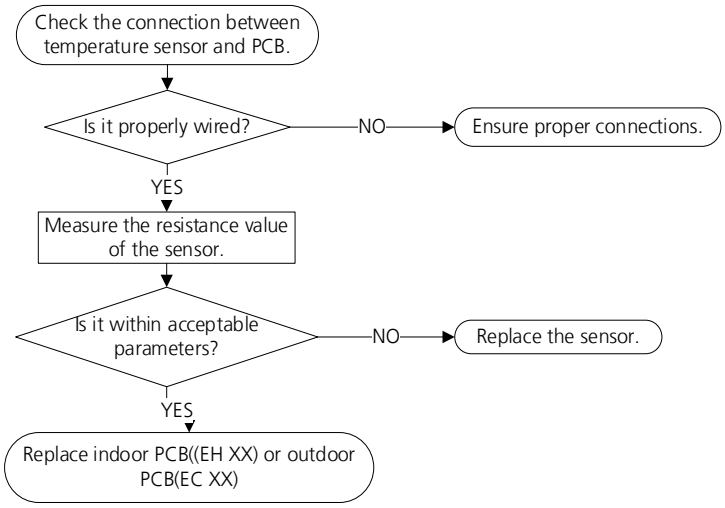

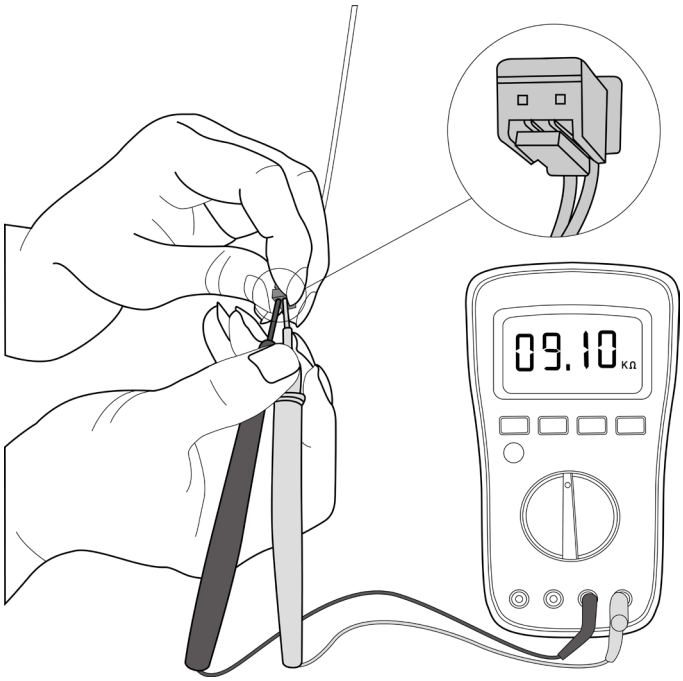

This picture and the value are only for reference, actual appearance and value may vary

6.5 EL0C (System lacks refrigerant Diagnosis and Solution)

Description: Judging the abnormality of the refrigeration system according to the number of compressor stops and the changes in operating parameters caused by excessive exhaust temperature.

Recommended parts to prepare:

- Indoor PCB
- Additional refrigerant

Troubleshooting and repair:

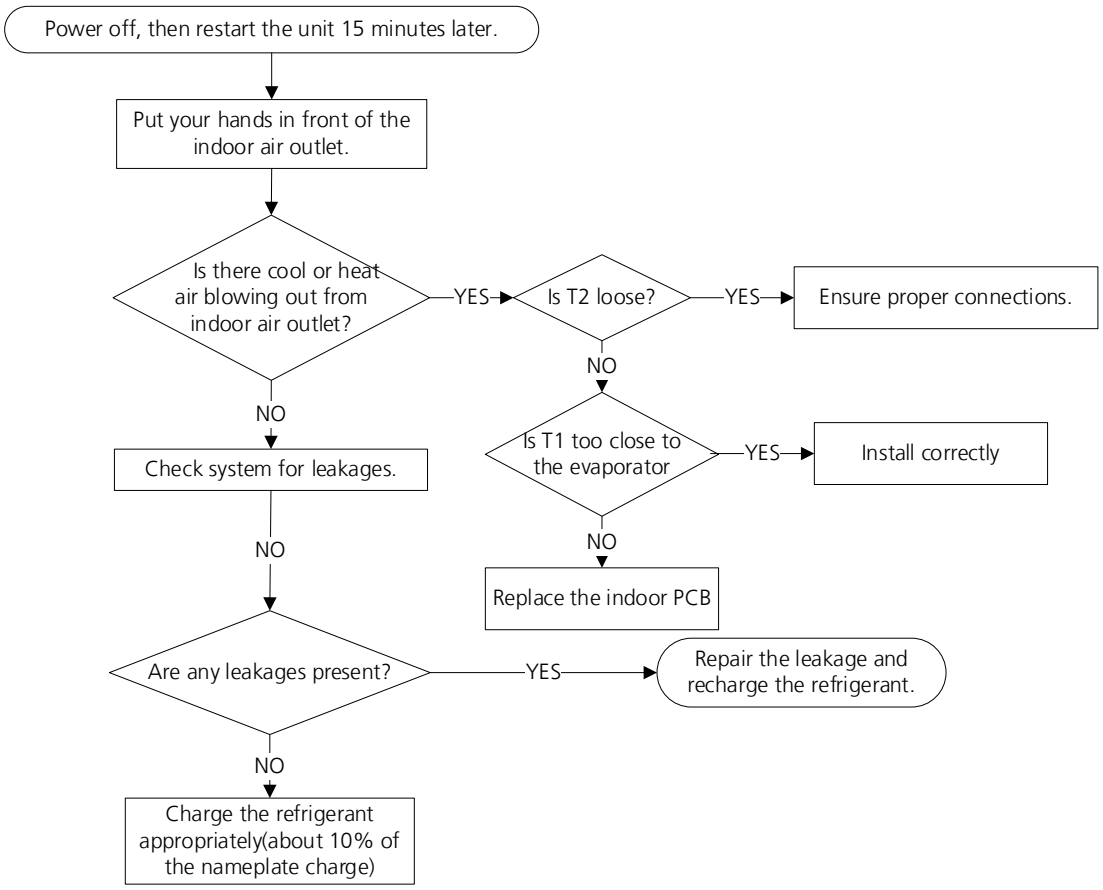

6.6 EH0E(Water-Level Alarm Malfunction Diagnosis and Solution)

Description: If the sampling voltage is not 5V, the LED displays the failure code.

Recommended parts to prepare:

- Connection wires
- Water-level switch
- Water pump
- Indoor PCB

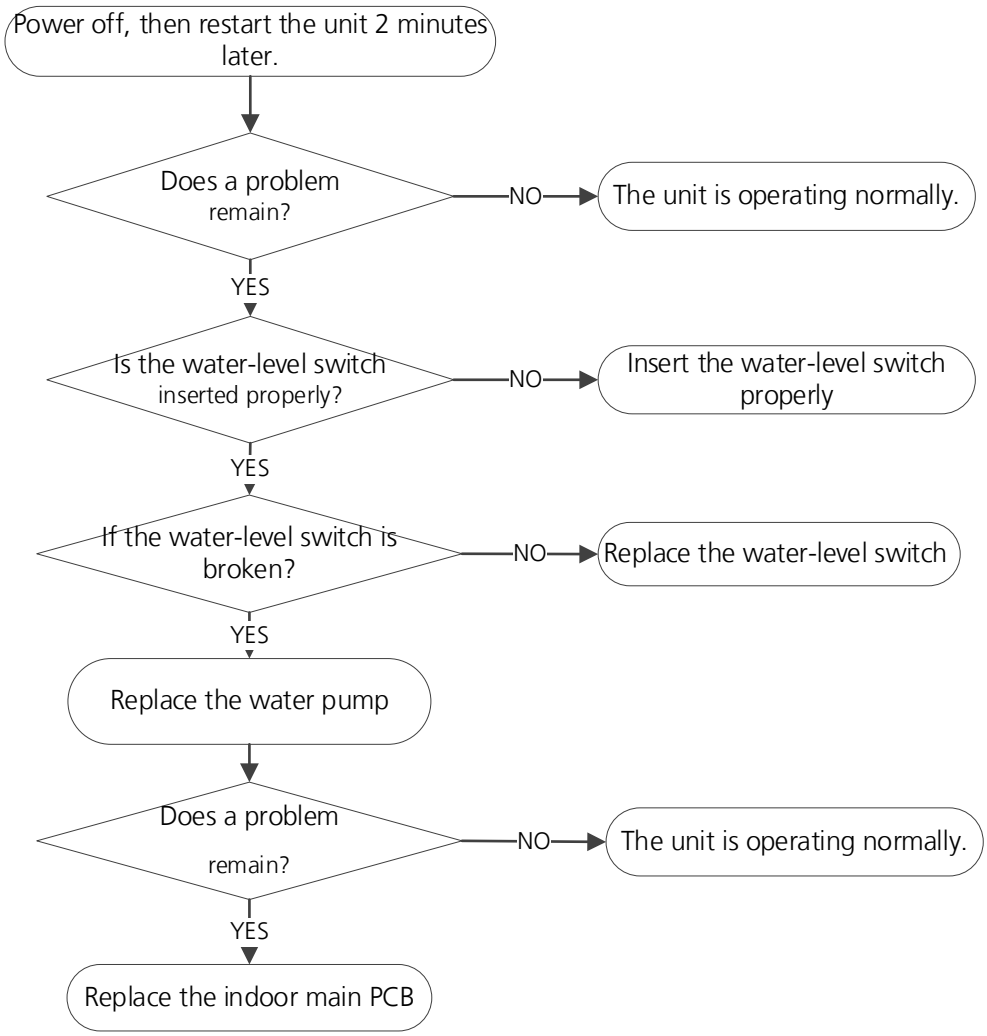

6.7 PC00(ODU IPM module protection Diagnosis and Solution)

Description: When the voltage signal the IPM sends to the compressor drive chip is abnormal, the display LED shows "PC00" and the AC turn off.

Recommended parts to prepare:

- Connection wires
- IPM module board
- Outdoor fan assembly
- Compressor
- Outdoor PCB

Troubleshooting and repair:

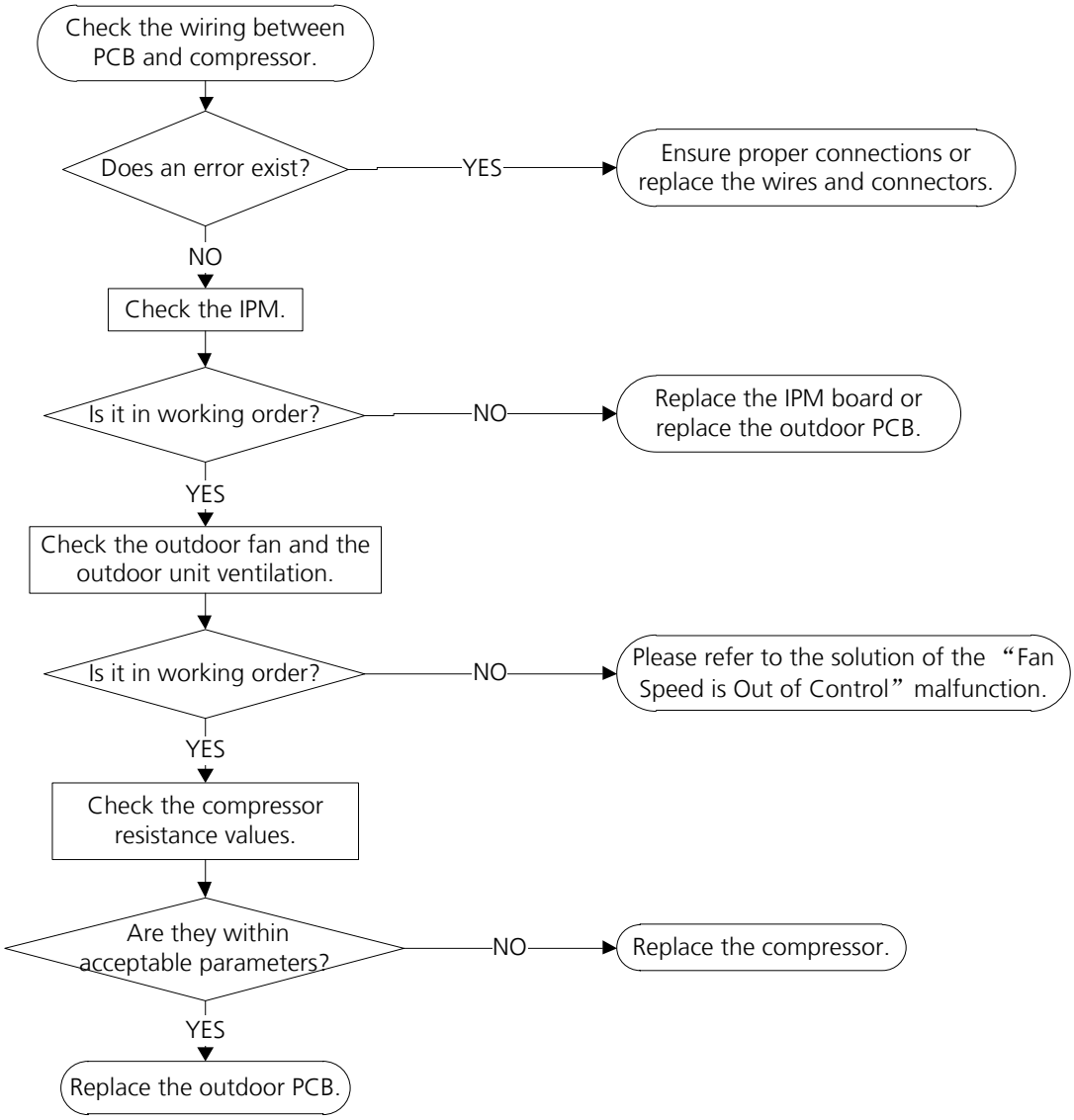

6.8 PC01(ODU voltage protection Diagnosis and Solution)

Description: Abnormal increases or decreases in voltage are detected by checking the specified voltage detection circuit.

Recommended parts to prepare:

- Power supply wires
- IPM module board
- PCB
- Reactor

Troubleshooting and repair:

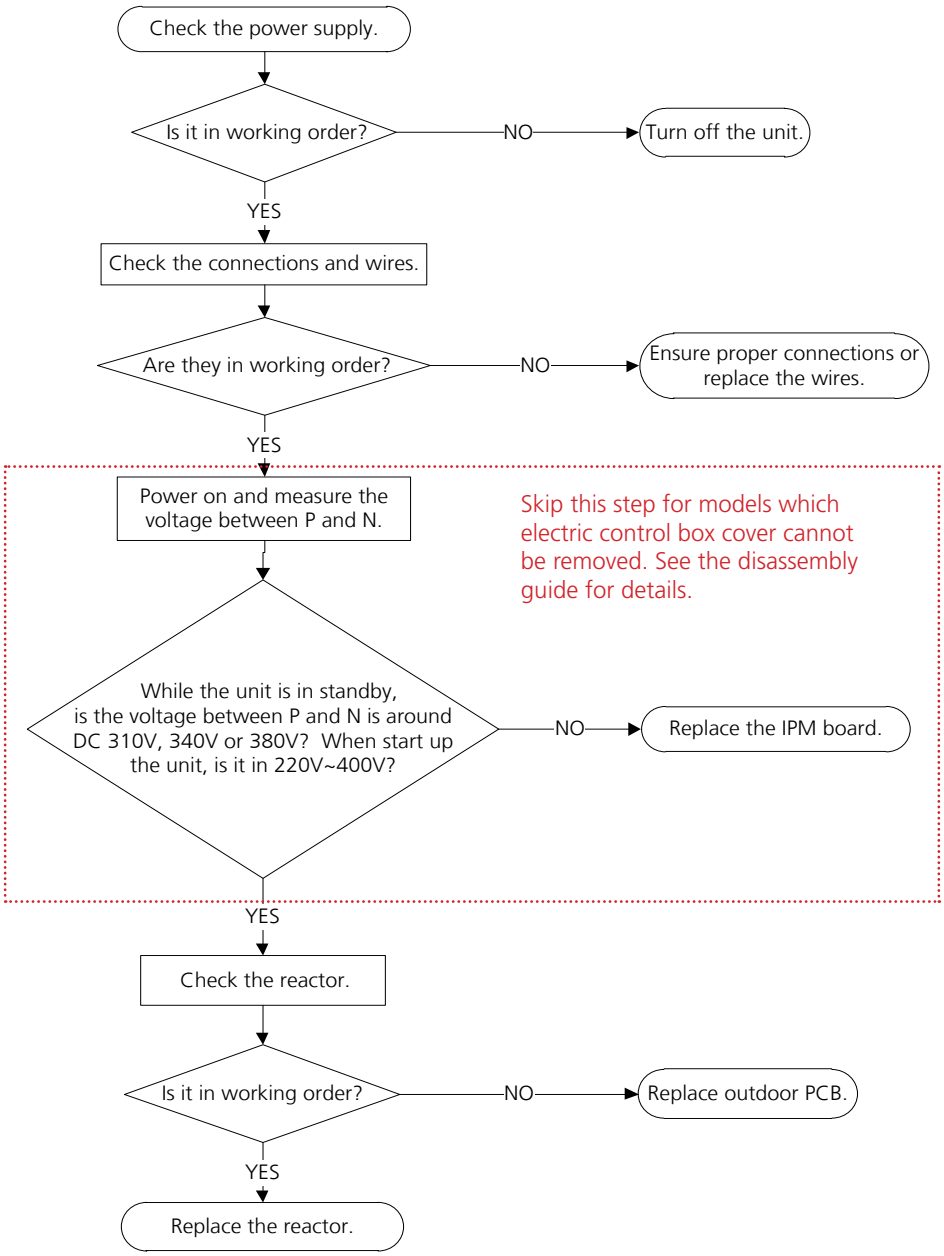

6.9 PC04(Inverter compressor drive error Diagnosis and Solution)

Description: An abnormal inverter compressor drive is detected by a special detection circuit, including communication signal detection, voltage detection, compressor rotation speed signal detection and so on.

Recommended parts to prepare:

- Connection wires
- IPM module board
- Outdoor fan assembly
- Compressor
- Outdoor PCB

Troubleshooting and repair:

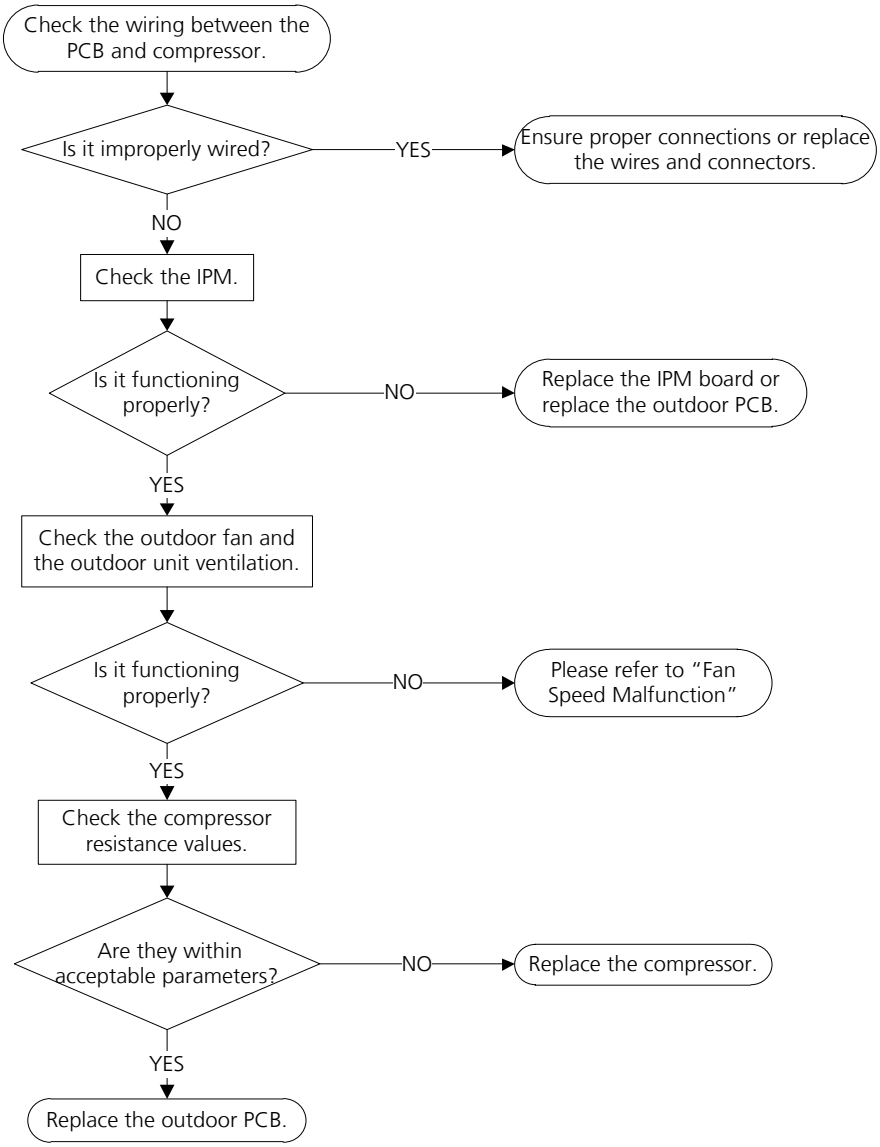

6.10 PC03(Pressure protection (low or high pressure) Diagnosis and Solution)

Description: Outdoor pressure switch cut off the system because high pressure is higher than 4.4 MPa or outdoor pressure switch cut off the system because low pressure is lower than 0.13 MPa, the LED displays the failure code.
Recommended parts to prepare:

- Connection wires
- Pressure switch
- Outdoor fan
- Outdoor main PCB
- Refrigerant

Troubleshooting and repair:

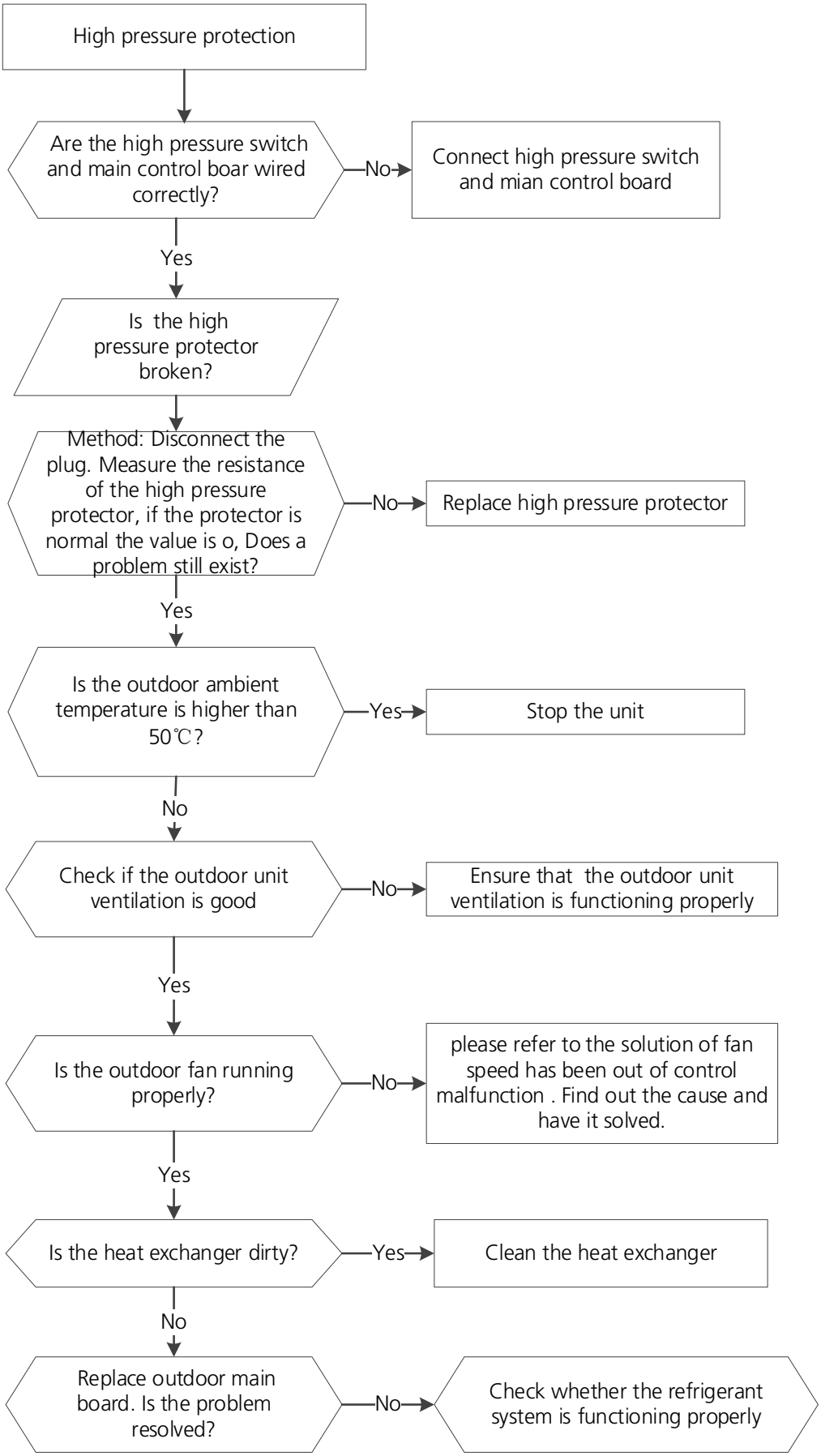
High pressure protection
Are the high pressure switch and main control boar wired correctly?
No
Connect high pressure switch and mian control board
Yes
Is the high pressure protector broken?
Method: Disconnect the plug. Measure the resistance of the high pressure protector, if the protector is normal the value is o, Does a problem still exist?
No
Replace high pressure protector
Yes
Is the outdoor ambient temperature is higher than 50℃?
Yes
Stop the unit
No
Check if the outdoor unit ventilation is good
No
Ensure that the outdoor unit ventilation is functioning properly
Yes
Is the outdoor fan running properly?
No
please refer to the solution of fan speed has been out of control malfunction . Find out the cause and have it solved.
Yes
Is the heat exchanger dirty?
Yes
Clean the heat exchanger
No
Replace outdoor main board. Is the problem resolved?
No
Check whether the refrigerant system is functioning properly

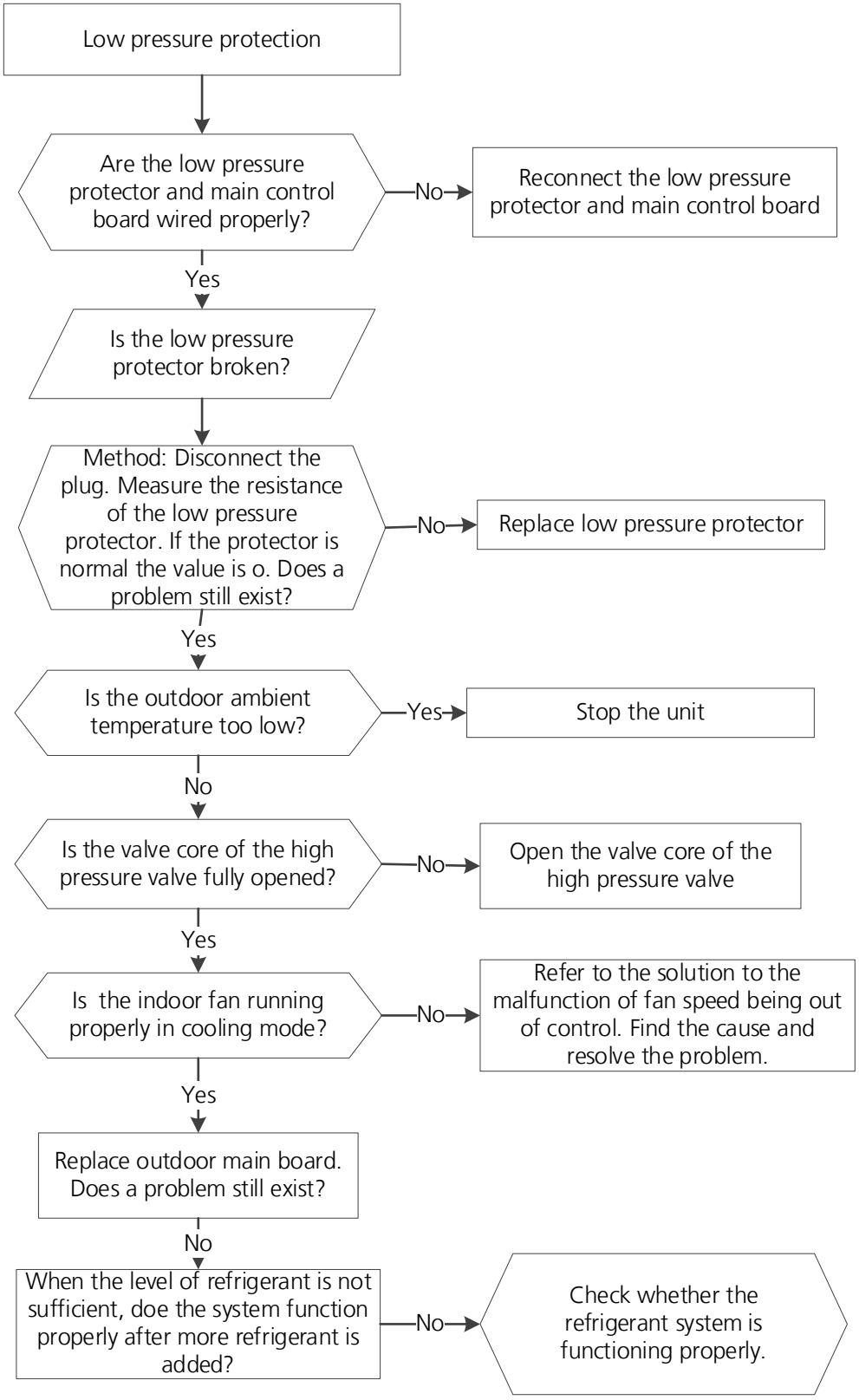
Low pressure protection
Are the low pressure protector and main control board wired properly?
No
Reconnect the low pressure protector and main control board
Yes
Is the low pressure protector broken?
Method: Disconnect the plug. Measure the resistance of the low pressure protector. If the protector is normal the value is o. Does a problem still exist?
No
Replace low pressure protector
Yes
Is the outdoor ambient temperature too low?
Yes
Stop the unit
No
Is the valve core of the high pressure valve fully opened?
No
Open the valve core of the high pressure valve
Yes
Is the indoor fan running properly in cooling mode?
No
Refer to the solution to the malfunction of fan speed being out of control. Find the cause and resolve the problem.
Yes
Replace outdoor main board. Does a problem still exist?
No
When the level of refrigerant is not sufficient, doe the system function properly after more refrigerant is added?
No
Check whether the refrigerant system is functioning properly.

6.11 PC02(Compressor top (or IPM) temp. protection Diagnosis and Solution)

Description: For some models with overload protection, If the sampling voltage is not 5V, the LED will display the failure.

If the temperature of IPM module is higher than a certain value, the LED displays the failure code.

Models without overload protector should be diagnosed according to the second flowchart.

Recommended parts to prepare:

- Connection wires
- Outdoor PCB
- IPM module board
- High pressure protector
- System blockages

Troubleshooting and repair:

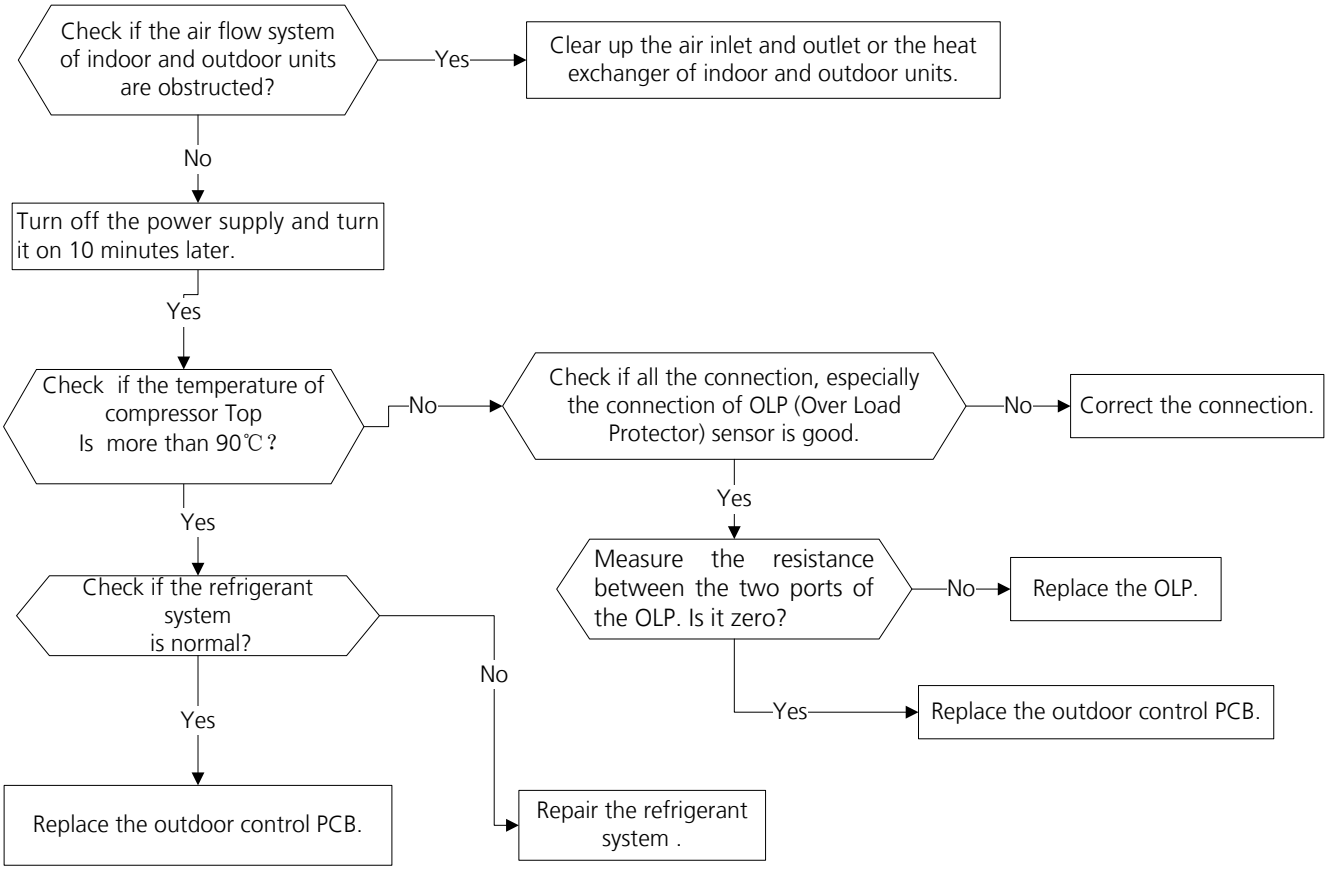

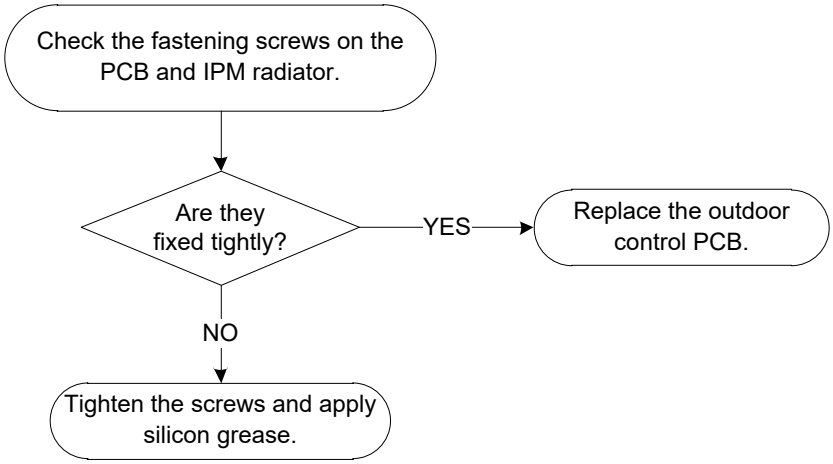

6.12 PC0L (Low ambient temperature protection)

Description: It is a protection function. When compressor is off, outdoor ambient temperature(T4) is lower than -35°C. for 10s, the AC will stop and display the failure code.

When compressor is on, outdoor ambient temperature(T4) is lower than -40°C.for 10s, the AC will stop and display the failure code.

When outdoor ambient temperature(T4) is no lower than -32°C.for 10s, the unit will exit protection.

6.13 EHb3 (Communication malfunction between wire and master control) Diagnosis and Solution

Description: If Indoor PCB does not receive feedback from wired controller, the error displays on the wired controller

Recommended parts to prepare:

- Connection wires
- Indoor PCB
- Wired controller

Troubleshooting and repair:

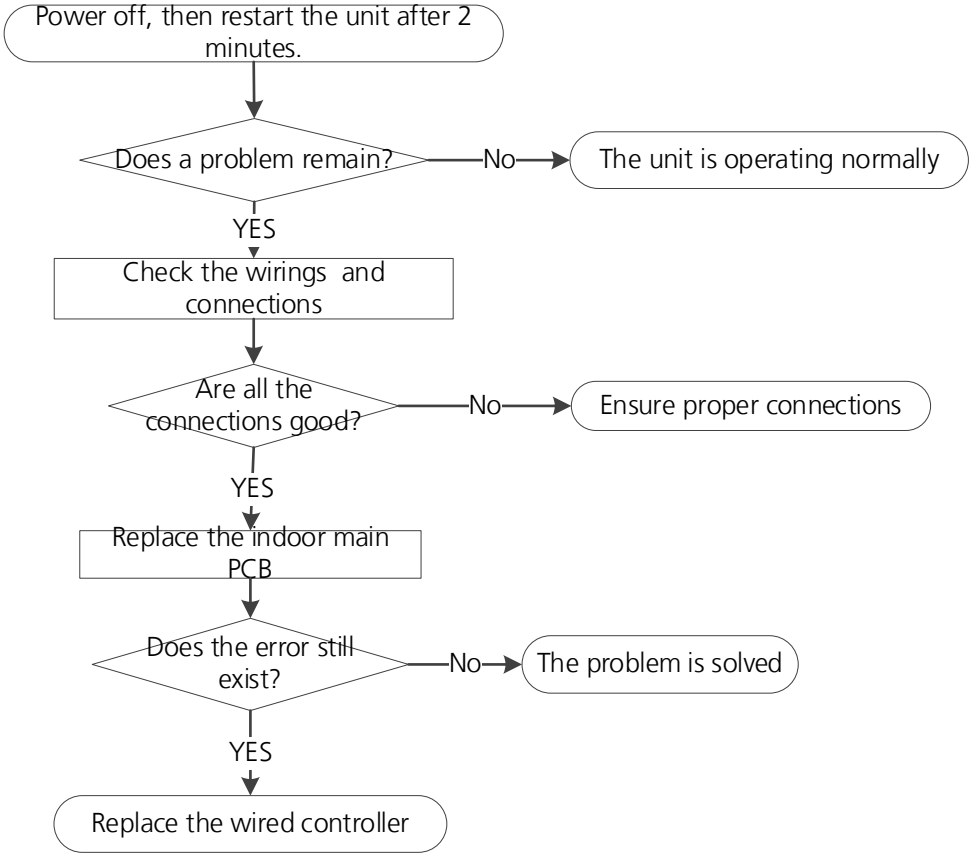

6.14 EHbA(Communication error between the indoor unit and the external fan module)/ EH3A(External fan DC bus voltage is too low protection)/ EH3b(External fan DC bus voltage is too high fault) diagnosis and solution

Description: Indoor unit does not receive the feedback from external fan module during 150 seconds.

or Indoor unit receives abnormal increases or decreases in voltage from external fan module.

Recommended parts to prepare:

- Indoor main PCB

Troubleshooting and repair:

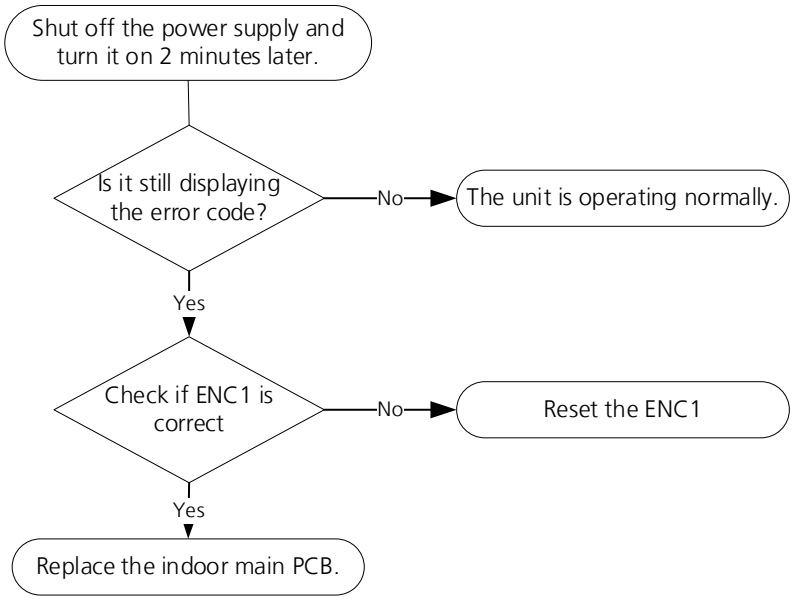

6.15 FHCC(Refrigerant sensor error) or EHC3(Refrigerant sensor is out of range) diagnosis and solution

Description: Indoor unit receives fault signal for 10s or indoor unit does not receive feedback from refrigerant sensor for 150s.

Recommended parts to prepare:

- Connection wires
- Sensors
- Indoor main PCB

Troubleshooting and repair:

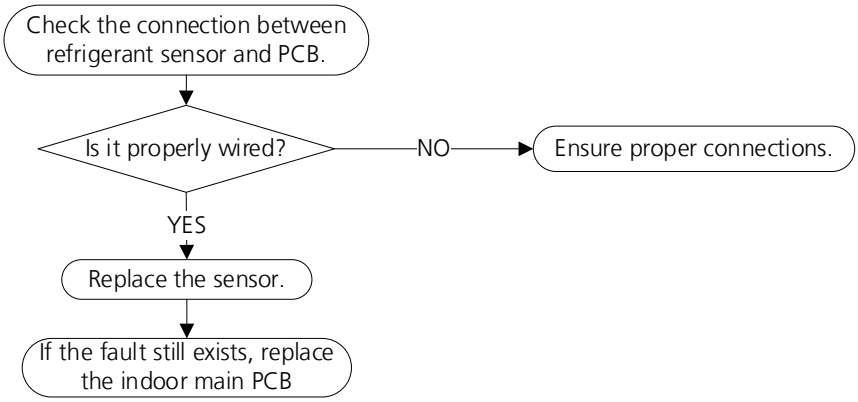

6.16 EHC1(Refrigerant sensor detects leakage) or EHC2(Refrigerant sensor is out of range and leakage is detected) diagnosis and solution

Description:

The refrigerant sensor detects a concentration higher than or equal to 10%*LFL for 10 seconds or the refrigerant sensor detects a concentration higher than or equal to 20%*LFL or the multi model receives the refrigerant leakage protection fault sent by the outdoor unit.

Multi-zone: Only the buzzer of the indoor unit that detects refrigerant leakage continues to sound the alarm, the shortest sound is 10 seconds, and the longest sound is 5 minutes (you can press any key such as remote control or wire control, APP and so on to eliminate the alarm), and the other non-refrigerant leakage fault indoor unit only displays "ECC1", but the buzzer does not sound.

Recommended parts to prepare:

- Additional refrigerant

Troubleshooting and repair:

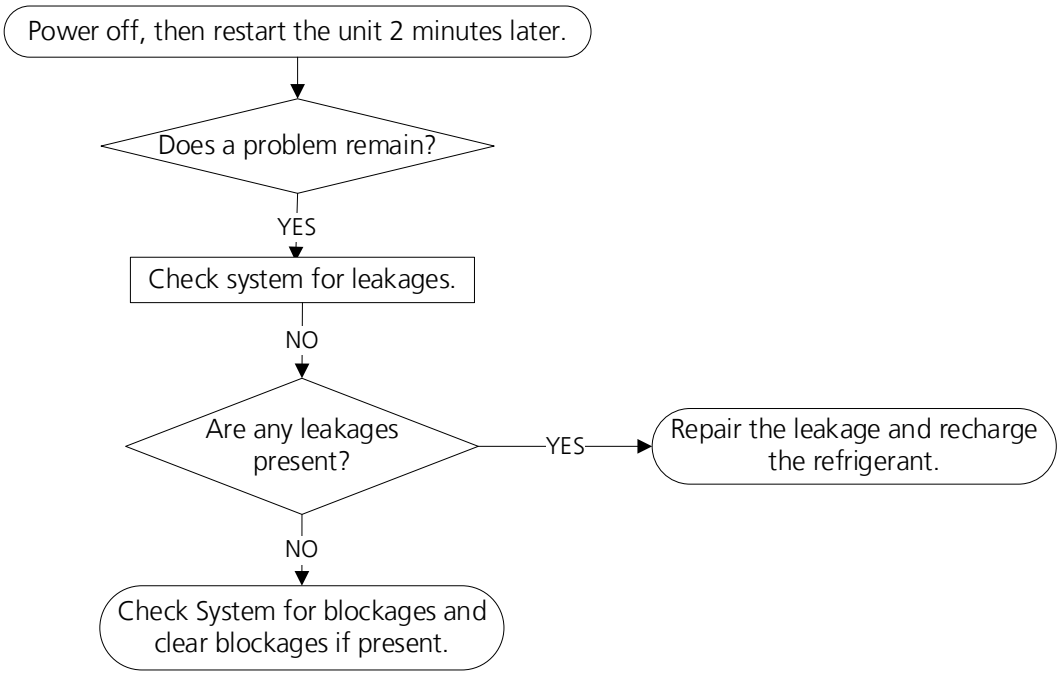

6.17 EL11 (Communication malfunction between main unit and secondary units(for twins system) Diagnosis and Solution)

Description: When set in twins system, master unit and slave unit cannot be recognized normally.

Recommended parts to prepare:

- Connection wires
- Indoor PCB

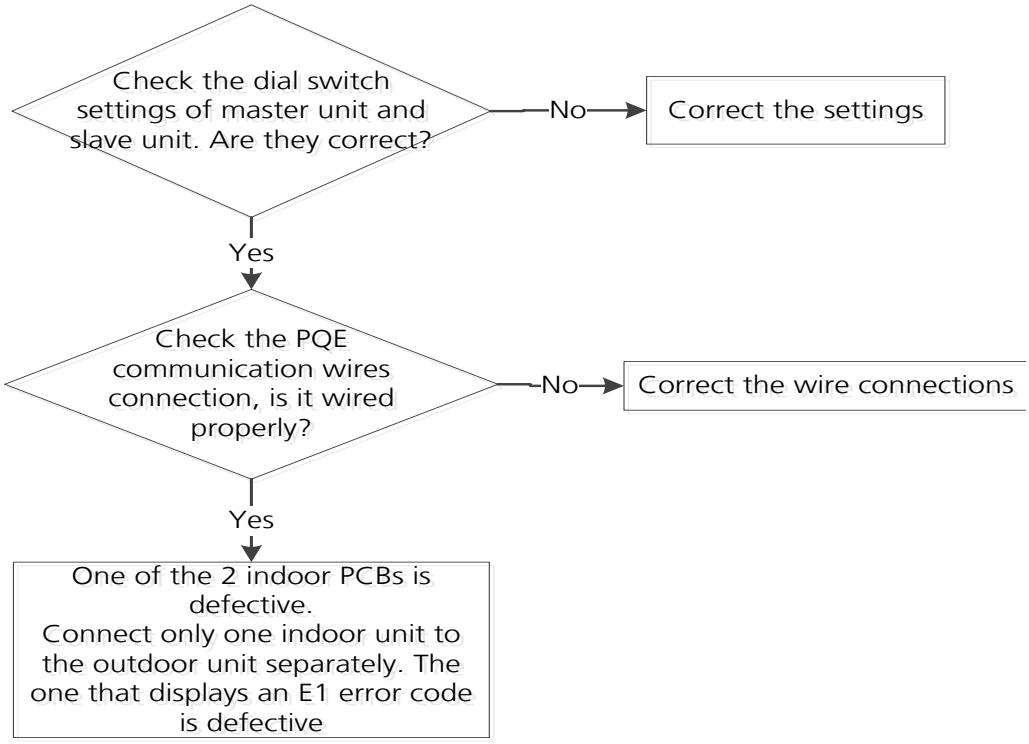

6.18 EH12 (Main unit or secondary units malfunction(for twins system)) Diagnosis and Solution)

Description: When set in twins system, one indoor unit displays this error code, which means another indoor unit is faulty. Check another indoor unit's error code and then follow the prescribed solutions to resolve the malfunction.

7. Check Procedures

7.1 Temperature Sensor Check

WARNING

Be sure to turn off all power supplies or disconnect all wires to avoid electric shock.
Operate after compressor and coil have returned to normal temperature in case of injury.

1. Disconnect temperature sensor from PCB (Refer to Indoor Disassembly and Outdoor Disassembly).
2. Measure the resistance value of the sensor using a multi-meter.
3. Check corresponding temperature sensor resistance value table (Refer to Chapter 8. Appendix).

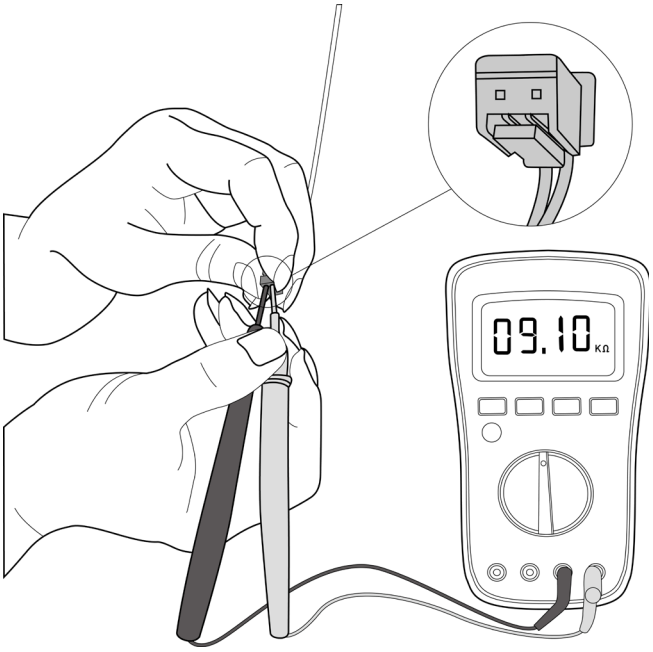

Note: The picture and the value are only for reference, actual condition and specific value may vary.

Appendix

Contents

i) Temperature Sensor Resistance Value Table for TP (°C --K) 2

ii) Other Temperature Sensors Resistance Value Table (°C – K) 3

iii) Pressure On Service Port 4

iV) System Pressure Table 6

i) Temperature Sensor Resistance Value Table for TP (°C --K)

°C	°F	K Ohm	°C	°F	K Ohm	°C	°F	K Ohm	°C	°F	K Ohm
°C	°F	K Ohm	°C	°F	K Ohm	°C	°F	K Ohm	°C	°F	K Ohm
-20	-4	542.7	20	68	68.66	60	140	13.59	100	212	3.702
-19	-2	511.9	21	70	65.62	61	142	13.11	101	214	3.595
-18	0	483	22	72	62.73	62	144	12.65	102	216	3.492
-17	1	455.9	23	73	59.98	63	145	12.21	103	217	3.392
-16	3	430.5	24	75	57.37	64	147	11.79	104	219	3.296
-15	5	406.7	25	77	54.89	65	149	11.38	105	221	3.203
-14	7	384.3	26	79	52.53	66	151	10.99	106	223	3.113
-13	9	363.3	27	81	50.28	67	153	10.61	107	225	3.025
-12	10	343.6	28	82	48.14	68	154	10.25	108	226	2.941
-11	12	325.1	29	84	46.11	69	156	9.902	109	228	2.86
-10	14	307.7	30	86	44.17	70	158	9.569	110	230	2.781
-9	16	291.3	31	88	42.33	71	160	9.248	111	232	2.704
-8	18	275.9	32	90	40.57	72	162	8.94	112	234	2.63
-7	19	261.4	33	91	38.89	73	163	8.643	113	235	2.559
-6	21	247.8	34	93	37.3	74	165	8.358	114	237	2.489
-5	23	234.9	35	95	35.78	75	167	8.084	115	239	2.422
-4	25	222.8	36	97	34.32	76	169	7.82	116	241	2.357
-3	27	211.4	37	99	32.94	77	171	7.566	117	243	2.294
-2	28	200.7	38	100	31.62	78	172	7.321	118	244	2.233
-1	30	190.5	39	102	30.36	79	174	7.086	119	246	2.174
0	32	180.9	40	104	29.15	80	176	6.859	120	248	2.117
1	34	171.9	41	106	28	81	178	6.641	121	250	2.061
2	36	163.3	42	108	26.9	82	180	6.43	122	252	2.007
3	37	155.2	43	109	25.86	83	181	6.228	123	253	1.955
4	39	147.6	44	111	24.85	84	183	6.033	124	255	1.905
5	41	140.4	45	113	23.89	85	185	5.844	125	257	1.856
6	43	133.5	46	115	22.89	86	187	5.663	126	259	1.808
7	45	127.1	47	117	22.1	87	189	5.488	127	261	1.762
8	46	121	48	118	21.26	88	190	5.32	128	262	1.717
9	48	115.2	49	120	20.46	89	192	5.157	129	264	1.674
10	50	109.8	50	122	19.69	90	194	5	130	266	1.632
11	52	104.6	51	124	18.96	91	196	4.849			
12	54	99.69	52	126	18.26	92	198	4.703			
13	55	95.05	53	127	17.58	93	199	4.562			
14	57	90.66	54	129	16.94	94	201	4.426			
15	59	86.49	55	131	16.32	95	203	4.294			
16	61	82.54	56	133	15.73	96	205	4.167			
17	63	78.79	57	135	15.16	97	207	4.045			
18	64	75.24	58	136	14.62	98	208	3.927			
19	66	71.86	59	138	14.09	99	210	3.812			

ii) Other Temperature Sensors Resistance Value Table (°C – K)

°C	°F	K Ohm	°C	°F	K Ohm	°C	°F	K Ohm	°C	°F	K Ohm
-20	-4	115.266	20	68	12.6431	60	140	2.35774	100	212	0.62973
-19	-2	108.146	21	70	12.0561	61	142	2.27249	101	214	0.61148
-18	0	101.517	22	72	11.5	62	144	2.19073	102	216	0.59386
-17	1	96.3423	23	73	10.9731	63	145	2.11241	103	217	0.57683
-16	3	89.5865	24	75	10.4736	64	147	2.03732	104	219	0.56038
-15	5	84.219	25	77	10	65	149	1.96532	105	221	0.54448
-14	7	79.311	26	79	9.55074	66	151	1.89627	106	223	0.52912
-13	9	74.536	27	81	9.12445	67	153	1.83003	107	225	0.51426
-12	10	70.1698	28	82	8.71983	68	154	1.76647	108	226	0.49989
-11	12	66.0898	29	84	8.33566	69	156	1.70547	109	228	0.486
-10	14	62.2756	30	86	7.97078	70	158	1.64691	110	230	0.47256
-9	16	58.7079	31	88	7.62411	71	160	1.59068	111	232	0.45957
-8	18	56.3694	32	90	7.29464	72	162	1.53668	112	234	0.44699
-7	19	52.2438	33	91	6.98142	73	163	1.48481	113	235	0.43482
-6	21	49.3161	34	93	6.68355	74	165	1.43498	114	237	0.42304
-5	23	46.5725	35	95	6.40021	75	167	1.38703	115	239	0.41164
-4	25	44	36	97	6.13059	76	169	1.34105	116	241	0.4006
-3	27	41.5878	37	99	5.87359	77	171	1.29078	117	243	0.38991
-2	28	39.8239	38	100	5.62961	78	172	1.25423	118	244	0.37956
-1	30	37.1988	39	102	5.39689	79	174	1.2133	119	246	0.36954
0	32	35.2024	40	104	5.17519	80	176	1.17393	120	248	0.35982
1	34	33.3269	41	106	4.96392	81	178	1.13604	121	250	0.35042
2	36	31.5635	42	108	4.76253	82	180	1.09958	122	252	0.3413
3	37	29.9058	43	109	4.5705	83	181	1.06448	123	253	0.33246
4	39	28.3459	44	111	4.38736	84	183	1.03069	124	255	0.3239
5	41	26.8778	45	113	4.21263	85	185	0.99815	125	257	0.31559
6	43	25.4954	46	115	4.04589	86	187	0.96681	126	259	0.30754
7	45	24.1932	47	117	3.88673	87	189	0.93662	127	261	0.29974
8	46	22.5662	48	118	3.73476	88	190	0.90753	128	262	0.29216
9	48	21.8094	49	120	3.58962	89	192	0.8795	129	264	0.28482
10	50	20.7184	50	122	3.45097	90	194	0.85248	130	266	0.2777
11	52	19.6891	51	124	3.31847	91	196	0.82643	131	268	0.27078
12	54	18.7177	52	126	3.19183	92	198	0.80132	132	270	0.26408
13	55	17.8005	53	127	3.07075	93	199	0.77709	133	271	0.25757
14	57	16.9341	54	129	2.95896	94	201	0.75373	134	273	0.25125
15	59	16.1156	55	131	2.84421	95	203	0.73119	135	275	0.24512
16	61	15.3418	56	133	2.73823	96	205	0.70944	136	277	0.23916
17	63	14.6181	57	135	2.63682	97	207	0.68844	137	279	0.23338
18	64	13.918	58	136	2.53973	98	208	0.66818	138	280	0.22776
19	66	13.2631	59	138	2.44677	99	210	0.64862	139	282	0.22231

iii) Pressure On Service Port

Cooling chart(R454B):

°F(°C)	ODU(DB) / IDU(DB/WB)	0(-17)	5(-15)	15 (-9.44)	45 (7.22)	75 (23.89)	85 (29.44)	95 (35)	105 (40.56)	115 (46.11)	120 (48.89)
BAR	70/59 (21.11/15)	5.9	6.0	6.7	7.3	7.5	7.2	7.4	7.9	9.2	9.7
	75/63 (23.89/17.22)	6.1	6.2	7.2	7.9	7.9	7.6	7.9	8.3	9.8	10.2
	80/67 (26.67/19.44)	6.5	6.6	7.8	8.7	8.5	8.2	8.3	8.8	10.2	10.8
	90/73 (32.22/22.78)	7.1	7.2	8.8	9.6	9.4	8.7	9.2	9.7	11.3	11.9
PSI	70/59 (21.11/15)	85	86	97	106	109	104	108	114	134	140
	75/63 (23.89/17.22)	89	90	105	114	114	110	115	121	142	148
	80/67 (26.67/19.44)	94	95	113	126	123	118	121	127	148	157
	90/73 (32.22/22.78)	102	104	127	139	136	126	133	140	164	172
MPa	70/59 (21.11/15)	0.59	0.60	0.67	0.73	0.75	0.72	0.74	0.79	0.92	0.97
	75/63 (23.89/17.22)	0.61	0.62	0.72	0.79	0.79	0.76	0.79	0.83	0.98	1.02
	80/67 (26.67/19.44)	0.65	0.66	0.78	0.87	0.85	0.82	0.83	0.88	1.02	1.08
	90/73 (32.22/22.78)	0.71	0.72	0.88	0.96	0.94	0.87	0.92	0.97	1.13	1.19

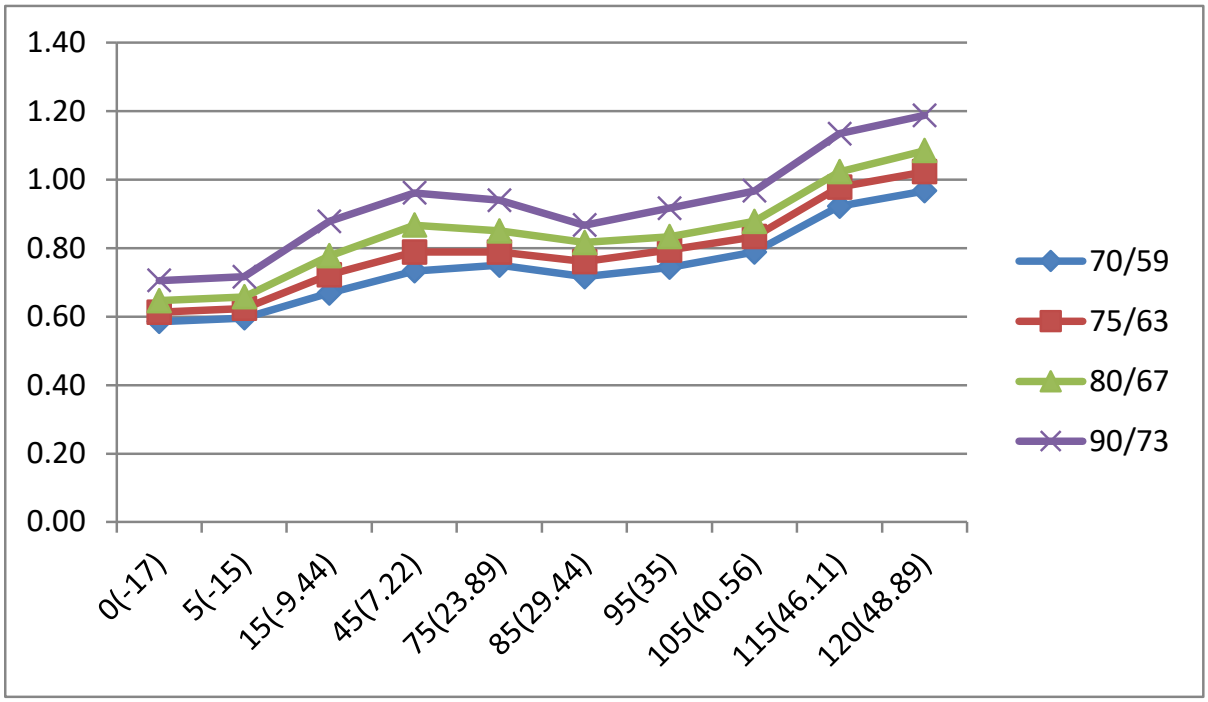

Heating chart(R454B):

°F(°C)	ODU(DB/WB) / IDU(DB)	57/53 (13.89/11.67)	47/43 (8.33/6.11)	37/33 (2.78/0.56)	27/23 (-2.78/-5)	17/13 (-8.33/-10.56)	0/- (-17)	-17 (-27)
BAR	55(12.78)	27.7	26.1	23.1	20.9	19.0	16.9	15.1
	65(18.33)	29.8	27.5	24.3	23.2	21.3	18.7	17.4
	75(23.89)	31.0	28.8	25.4	24.0	22.8	19.6	18.3
PSI	55(12.78)	402	378	335	303	275	245	218
	65(18.33)	432	398	352	337	309	271	252
	75(23.89)	449	418	368	348	330	284	265
MPa	55(12.78)	2.77	2.61	2.31	2.09	1.90	1.69	1.51
	65(18.33)	2.98	2.75	2.43	2.32	2.13	1.87	1.74
	75(23.89)	3.10	2.88	2.54	2.40	2.28	1.96	1.83

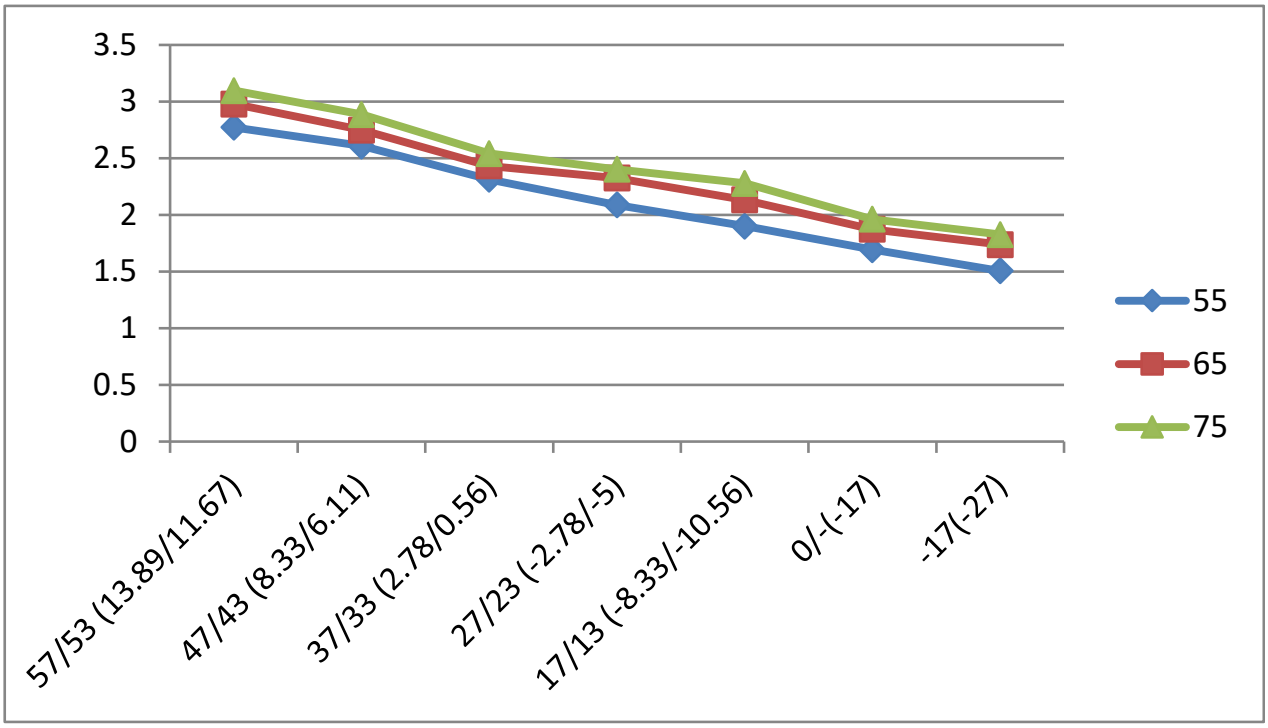

iV) System Pressure Table-R454B

Pressure			Temperature		Pressure			Temperature	
Kpa	bar	PSI	°C	°F	Kpa	bar	PSI	°C	°F
58.196	0.58	8.44	-60	-76	935.23	9.35	135.64	8	46.4
61.517	0.62	8.92	-59	-74.2	963.75	9.64	139.78	9	48.2
64.988	0.65	9.43	-58	-72.4	992.93	9.93	144.01	10	50
68.615	0.69	9.95	-57	-70.6	1022.8	10.23	148.34	11	51.8
72.402	0.72	10.50	-56	-68.8	1053.3	10.53	152.76	12	53.6
76.354	0.76	11.07	-55	-67	1084.5	10.85	157.29	13	55.4
80.478	0.80	11.67	-54	-65.2	1116.4	11.16	161.91	14	57.2
84.776	0.85	12.30	-53	-63.4	1149	11.49	166.64	15	59
89.256	0.89	12.95	-52	-61.6	1182.3	11.82	171.47	16	60.8
93.923	0.94	13.62	-51	-59.8	1216.3	12.16	176.40	17	62.6
98.781	0.99	14.33	-50	-58	1251.1	12.51	181.45	18	64.4
103.84	1.04	15.06	-49	-56.2	1286.6	12.87	186.60	19	66.2
109.1	1.09	15.82	-48	-54.4	1322.8	13.23	191.85	20	68
114.56	1.15	16.61	-47	-52.6	1359.9	13.60	197.23	21	69.8
120.25	1.20	17.44	-46	-50.8	1397.7	13.98	202.71	22	71.6
126.15	1.26	18.30	-45	-49	1436.3	14.36	208.31	23	73.4
132.28	1.32	19.18	-44	-47.2	1475.7	14.76	214.02	24	75.2
138.64	1.39	20.11	-43	-45.4	1515.9	15.16	219.85	25	77
145.24	1.45	21.06	-42	-43.6	1557	15.57	225.82	26	78.8
152.09	1.52	22.06	-41	-41.8	1598.9	15.99	231.89	27	80.6
159.18	1.59	23.09	-40	-40	1641.6	16.42	238.09	28	82.4
166.54	1.67	24.15	-39	-38.2	1685.2	16.85	244.41	29	84.2
174.15	1.74	25.26	-38	-36.4	1729.7	17.30	250.86	30	86
182.04	1.82	26.40	-37	-34.6	1775	17.75	257.43	31	87.8
190.2	1.90	27.59	-36	-32.8	1821.3	18.21	264.15	32	89.6
198.65	1.99	28.81	-35	-31	1868.4	18.68	270.98	33	91.4
207.39	2.07	30.08	-34	-29.2	1916.5	19.17	277.95	34	93.2
216.42	2.16	31.39	-33	-27.4	1965.6	19.66	285.08	35	95
225.76	2.26	32.74	-32	-25.6	2015.5	20.16	292.31	36	96.8
235.41	2.35	34.14	-31	-23.8	2066.5	20.67	299.71	37	98.6
245.37	2.45	35.59	-30	-22	2118.4	21.18	307.24	38	100.4
255.67	2.56	37.08	-29	-20.2	2171.3	21.71	314.91	39	102.2
266.29	2.66	38.62	-28	-18.4	2225.2	22.25	322.73	40	104
277.25	2.77	40.21	-27	-16.6	2280.2	22.80	330.70	41	105.8
288.56	2.89	41.85	-26	-14.8	2336.1	23.36	338.81	42	107.6
300.22	3.00	43.54	-25	-13	2393.2	23.93	347.09	43	109.4
312.24	3.12	45.28	-24	-11.2	2451.3	24.51	355.52	44	111.2
324.63	3.25	47.08	-23	-9.4	2510.4	25.10	364.09	45	113
337.39	3.37	48.93	-22	-7.6	2570.7	25.71	372.84	46	114.8
350.54	3.51	50.84	-21	-5.8	2632.1	26.32	381.74	47	116.6
364.08	3.64	52.80	-20	-4	2694.7	26.95	390.82	48	118.4
378.02	3.78	54.83	-19	-2.2	2758.3	27.58	400.04	49	120.2
392.37	3.92	56.91	-18	-0.4	2823.2	28.23	409.46	50	122
407.13	4.07	59.05	-17	1.4	2889.3	28.89	419.04	51	123.8

422.31	4.22	61.25	-16	3.2	2956.5	29.57	428.79	52	125.6
437.92	4.38	63.51	-15	5	3025	30.25	438.72	53	127.4
453.98	4.54	65.84	-14	6.8	3094.7	30.95	448.83	54	129.2
470.47	4.70	68.23	-13	8.6	3165.7	31.66	459.13	55	131
487.43	4.87	70.69	-12	10.4	3238.1	32.38	469.63	56	132.8
504.84	5.05	73.22	-11	12.2	3311.7	33.12	480.30	57	134.6
522.73	5.23	75.81	-10	14	3386.7	33.87	491.18	58	136.4
541.1	5.41	78.48	-9	15.8	3463	34.63	502.25	59	138.2
559.95	5.60	81.21	-8	17.6	3540.7	35.41	513.52	60	140
579.31	5.79	84.02	-7	19.4	3619.9	36.20	525.00	61	141.8
599.16	5.99	86.90	-6	21.2	3700.5	37.01	536.69	62	143.6
619.54	6.20	89.85	-5	23	3782.7	37.83	548.61	63	145.4
640.43	6.40	92.88	-4	24.8	3866.3	38.66	560.74	64	147.2
661.86	6.62	95.99	-3	26.6	3951.5	39.52	573.10	65	149
683.82	6.84	99.18	-2	28.4	4038.3	40.38	585.69	66	150.8
706.34	7.06	102.44	-1	30.2	4126.8	41.27	598.52	67	152.6
729.41	7.29	105.79	0	32	4217	42.17	611.60	68	154.4
753.06	7.53	109.22	1	33.8	4309	43.09	624.95	69	156.2
777.28	7.77	112.73	2	35.6	4402.9	44.03	638.56	70	158
802.08	8.02	116.33	3	37.4	4498.7	44.99	652.46	71	159.8
827.48	8.27	120.01	4	39.2	4596.5	45.97	666.64	72	161.6
853.49	8.53	123.78	5	41	4696.5	46.97	681.15	73	163.4
880.11	8.80	127.64	6	42.8	4798.9	47.99	696.00	74	165.2
907.35	9.07	131.60	7	44.6	4904.1	49.04	711.25	75	167