Mitsutomo

Mitsutomo Submittal Data Sheet

R-454B 48k Non High Heat Multi Position Air Handler Heat Pump

Job Name: _____

Engineer: _____ Date: _____

Submitted By: _____ Unit Tag: _____

System Info & Features:

- 4 way multi position air handler
- Up to .8" static pressure
- 24V thermostat option
- Heating down to -13°
- Self diagnostics
- Super quiet
- ECM blower motor
- Programmable smart wall thermostat
- Large handheld remote
- Auto condenser coil cleaning cycle

MODEL NUMBER	
Indoor unit:	UHM48-DB-LA-Q
Outdoor unit:	RHO48-NB-LA-Q
Certified:	

SYSTEM PERFORMANCE AND DATA		
Cooling Effficiencies and Performance		
SEER2		16.0
EER2		10.0
Rated Capacity		48000
Min/Max Capacity		16600~49900
Moisture Removal	(L/H)	5.29
Standard Operating Range	(F°)	-13~122
Conditions:		Indoor: 80F° DB/67F° WB Outdoor: 95F° DB/75F° WB
Heating Efficiencies and Performance		
HSPF2-4		8.5
COP		3.45
1. @ 47F° Rated		48000
2. @ 47F° Min/Max Capacity		15300~49500
3. @ 17F° Rated		32400
4. @ 5F° Rated: Capacity / COP		38000/1.85
5. @ 5F° Max: Capacity		38000
Standard Operating Range	(F°)	-13~75
1. Conditions:		Indoor: 70F° DB/60F° WB Outdoor: 47F° DB/43F° WB
2. Conditions:		Indoor: 70F° DB/60F° WB Outdoor: 17F° DB/15F° WB
3. Conditions		Indoor: 70F° DB/60F° WB Outdoor: 5F° DB/5F° WB

ELECTRICAL		
Indoor Power Supply		115/208/230V,60Hz,1Ph
Indoor Min. Circuit Amps 115V/(208/230V)		14.5/11.0
Indoor Max Over Current Protection		15
Outdoor Power Supply		208/230V,60Hz,1Ph
Outdoor Min. Circuit Amps		36
Outdoor Max Over Current Protection		40
Communication Wiring	18-2 Mitsutomo Thermostat, 18-10 3rd Party Thermostat	
Compressor	(RLA)	27
Outdoor Fan Motor	(RLA)	2
Outdoor Fan Motor	(W)	250
Indoor Fan Motor	(RLA)	7.8
Indoor Fan Motor	(W)	750
System Power Input @ Cooling	(W)	4800(1400 ~ 5350)
System Power Input @ Heating	(W)	4085(1025 ~4650)

OPTIONAL ACCESSORIES	
8kw Electric Heat Kit	M-EAH-08-Q
15kw Electric Heat Kit	M-EAH-15-Q

SPECIFICATIONS		
Indoor:		
Indoor Air Flow (Turbo/H/M/L/Q)	(CFM)	1600.99 / 1471.50 / 1283.15 / 1094.80 / 1094.80
Indoor Noise Level (Turbo/H/M/L/Q)	(DBA)	53/53/50/44/44
Heating Efficiencies and Performance		
Compressor Type		ROTARY
Refrigerant		R454B
Refrigerant Oil Charge	(OZ)	60.87
Refrigerant Oil		HAF68D1C
Outdoor Air Flow (Max)	(CFM)	3037.1
Outdoor Noise Level	(DBA)	65

DIMENSIONS		
Indoor:		
Dimension	(W×D×H)	24.49 x 21.02 x 52.99
Package	(W×D×H)	27.95 x 26.77 x 56.50
Unit Weight	(lbs)	162.92
Shipping Weight	(lbs)	190.92
Outdoor:		
Dimension	(W×D×H)	38.58 x 16.34 x 38.39
Package	(W×D×H)	45.08 x 19.68 x 42.52
Unit Weight	(lbs)	192.90
Shipping Weight	(lbs)	224.21

REFRIGERANT PIPE DATA		
Liquid Size	(in.)	3/8
Gas Size	(in.)	3/4
Max. Piping Length	(ft)	246.0
Max. Height Differencex	(ft)	98.4
Max. Pre-charged Length	(ft)	24.6
Refrigerant Pre-charged Amount	(oz)	134.04
Additional Charge of Refrigerant	(oz/ft)	0.70
Connection Method		Flared

WARRANTY	
	5 years compressor 5 years parts

(Mitsutomo's products are subject to continuous improvements. Mitsutomo reserves the right to modify product design specifications and information in this data sheet without notice and without incurring any obligations)

Outdoor Unit Dimension

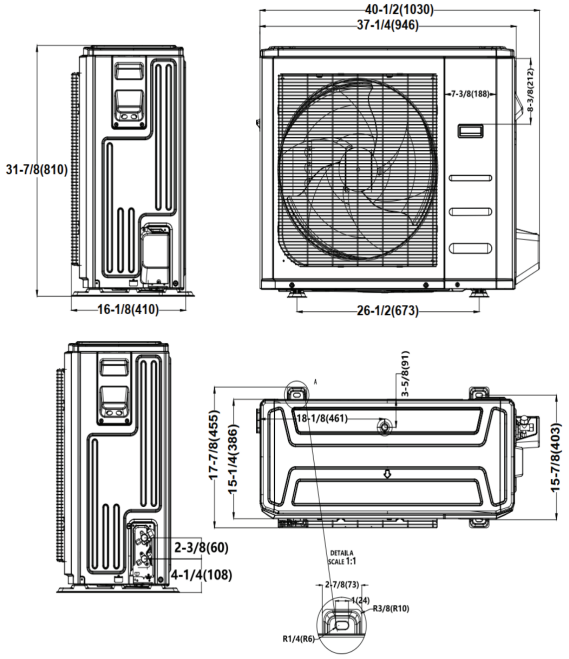

Indoor Unit Dimension (Internal Pump)

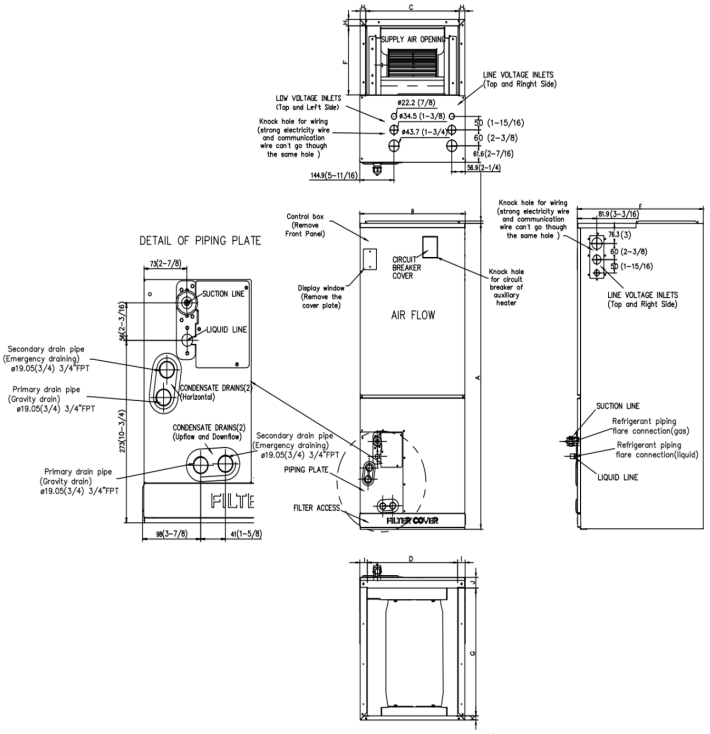

Model	Unit	A	B	C	D	E	F	G	H	I	J	K
48K	inch	53	24.5	22 5/8	22 1/8	21	10 1/4	18 3/4	15/16	1 1/8	1 5/8	3/4

(Mitsutomo's products are subject to continuous improvements. Mitsutomo reserves the right to modify product design specifications and information in this data sheet without notice and without incurring any obligations)